# DLT-V7210 K
# DLT-V7210 KD

## 集成键盘，基于X86的坚固耐用车载终端

## 特性

- 搭载四核Intel® Atom™ E3845 1.91 GHz处理器，带有4 GB RAM
- 10.1"宽屏幕WXGA彩色TFT显示屏，1280x800分辨率，500 cd/m²亮度
- 可选配除霜式电阻屏，支持冷链及冷库应用
- 抗冲击、耐磨的电容式触摸屏
- IP65防水防尘以及5M3抗冲击防震认证，坚固耐用
- 宽温操作(-30~50°C/-22~122°F)
- 集成键盘，方便操作
- 可选配不间断供电系统
- 可选配智能传感器，支持行车安全屏蔽等拓展功能

## 介绍

DLT-V7210K系列是坚固耐用的车载终端，带有集成键盘，专为后勤应用而设计，可提供强大的系统正常运行时间。DLT-V7210K搭载四核Intel® Atom™ E3845, 1.91 GHz处理器，带4 GB RAM, 支持宽工作温度范围（-30~50°C/-22~122°F），以承受极端的工业环境。DLT-V7210KD提供PCT除霜功能，适合冷链或冷冻库的应用。薄型天线提供出色的传输能力。此外，集成键盘提供了方便操作和高效的数据输入方式。同时，10.1" 宽屏幕WXGA彩色TFT显示屏，具有灵活的触摸控制功能，确保轻松输入并支持手套操作。

## 规格

| | | |
|---|---|---|
| 系统 | CPU | Intel® Atom™ E3845 quad-core, 1.91 GHz, with 4 GB RAM |
| | Memory | 8Gb - 256GB CFast |
| 尺寸 (W x H x D) | | 297.3 x 264.7 x 80 mm (11.7 x 10.42 x 3.15 in) |
| 重量 | | 3.7 kg (8.2 lb) without battery pack/accessories |
| 外观 | | Coated aluminum with completely sealed, fanless design |
| 显示屏 | | 10.1" widescreen WXGA color TFT display with 1280 x 800 resolution and 500 cd/m² brightness |
| 触摸屏 | Type | Sunlight-readable PCT multi touchscreen with optional defroster function<br>(touch sensitivity configurable for glove operation) |
| 控制钮/键盘 | Front Panel | 12 x control buttons (6 of which are programmable) |
| | Keyboard | Full-size keyboard (55 keys) with number pad, illuminated keys, and changeable silicon mat;<br>Supports on-site replacement<br>Keyboard versions: DLT-V7210K(QWERTY,QWERTZ,AZERTY); DLT-V7210KD(QWERTY) |
| 软件 | Operating System | Windows 10 IoT Enterprise, Windows 7 Pro, WES7, Debian-based Linux, IGEL Linux, Android 7.1.2 |
| | Emulations (Third-Party) | VT100, VT220, IBM 5250, TN 3270, Citrix Client®, Freefloat Access One |
| 通讯 | WLAN | WLAN IEEE 802.11 a/b/g/n/ac (optional) |
| | WWAN | WWAN (LTE, UMTS, HSPA+, GSM, GPRS, EDGE) (optional) |
| | LAN | Ethernet 10/100/1000 Mbit/s |
| | WPAN | Bluetooth 4.2 (optional) |
| I/O接口 | Serial | 2 x RS-232, COM1 with switchable 5 $V_{DC}$/RI |
| | USB | 4 x USB 2.0 (Hi-Speed™) bootable, 1 x service USB 3.0 (Super-Speed™) |
| | External Antennas | 1 x RSMA for WLAN, 1 x SMA for WWAN (optional) |
| 传感器 | | Accelerometer, Gyro (optional) |
| 音频 | | 1 x integrated speaker |
| 电源供应（内部） | | 12/24/48 $V_{DC}$ nominal voltage with automatic Power On/Off function via vehicle ignition and optional uninterruptible power supply (20 minutes typical); battery life may vary according to load |
| 环境 | IP Rating | IP65 rating for the entire system |
| | Operating Temperature | -30 ~ 50 °C (-22 ~ 122 °F) |
| | Relative Humidty | 10 to 90% at 40 °C (104 °F), non-condensing |
| | Shock/Vibration | 5M3 (EN 60721-3-5) and MIL-STD 810F (US highway truck vibration exposure) |
| | Touchscreen Durability | IK 08 |
| 认证 | | CE Immunity Class A, Emission Class B/FCC Class B (for EU and USA), CCC (for China) |

## 尺寸

Unit: mm

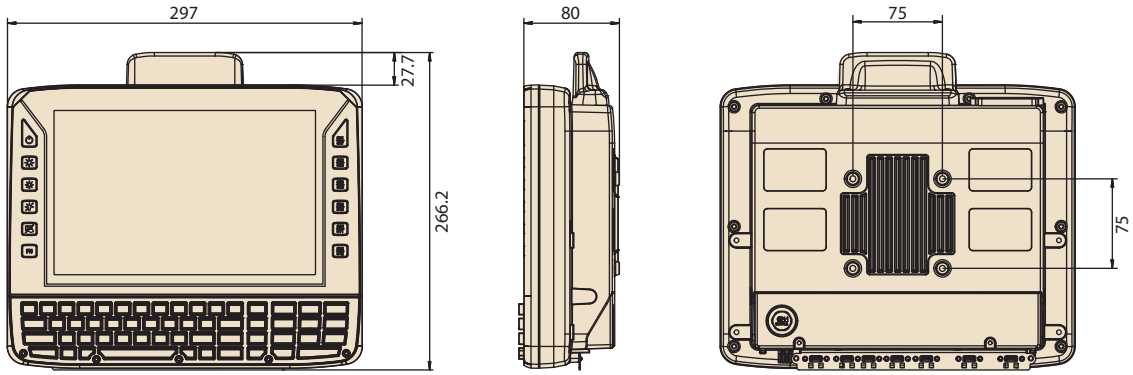


## I/O 接口

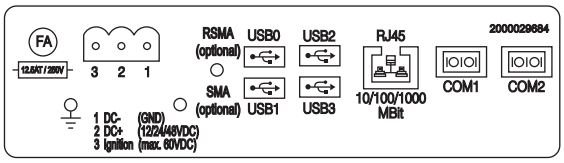


## 选配配件

| Part Number | Description |
|---|---|
| DL-MTKT009 | Mounting bracket mobile |
| DL-MTRM004 | RAM-Mount Set, one arm, arm length 130mm |
| DL-MTRM003 | RAM-Mount Set, one arm, arm length 215mm |
| DL-MTRM001 | RAM-Mount Set, two arms, arm length 150mm |

更多配件需求请与研华业务联系！

## 可选安装套件

**车载支架（单臂）**

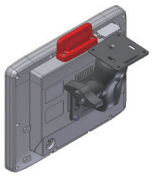

**车载支架（双臂）**

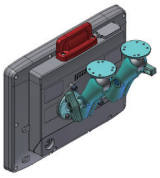
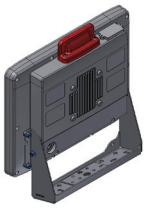
**活动式支架**