DLT-V83 Series

Rugged, High-Performance Vehicle-Mounted Terminal

Features

- 10/12/15" color TFT display
- Intel® Core™ i5-4300U/Celeron® 2980U dual-core processor
- Rugged, IP66-rated design with 5M2/5M3 certification
- Fully configurable to support specific application requirements
- Impact tolerant, abrasion-resistant touchscreen with IK08 classification
- Integrated uninterruptible power supply (supports up to 10 minutes operation)
- Wide operating temperature range (-30 ~ 50 °C/-22 ~ 122 °F) for extreme environments
- Latest WLAN standard for seamless roaming
- WWAN for outdoor operations

Introduction

The DLT-V83 series are rugged vehicle-mounted terminals designed to increase productivity and maximize system uptime for logistics applications. Powered by an Intel® Core™ i5/Celeron® processor, DLT-V83 terminals support a wide operating temperature range (-30 ~ 50 °C/-22 ~ 122 °F) to withstand operation in extreme industrial environments (from hot and humid, to dry freezer environments). Deployment of this series ensures data integrity and integration across all logistics operations. Furthermore, the high system configurability, connectivity, and interface diversity allows the terminals to be easily customized to support specification application requirements.

Specifications

System	CPU	Intel® Core™ i5-4300U dual-core, 1.9 GHz, with 4/8 GB RAM Intel® Celeron® 2980U dual-core, 1.6 GHz, with 4/8 GB RAM
	Memory	8/16/32/64/128/256 GB CFast 2.5" SSD with 128 GB (optional)
Housing		Coated aluminum with completely sealed, fanless design
Dimensions (W x H x D)	DLT-V8310	289.3 x 262.8 x 89 mm (11.39 x 10.35 x 3.50 in)
	DLT-V8312	328.4 x 293.9 x 94.7 mm (12.93 x 11.57 x 3.73 in)
	DLT-V8315	390 x 342 x 98 mm (15.35 x 13.46 x 3.86 in)
Weight	DLT-V8310	4.3 kg (9.47 lb) without antenna
	DLT-V8312	5.5 kg (12.12 lb) without antenna
	DLT-V8315	6.2 kg (13.66 lb) without antenna
Display	DLT-V8310 (i5 and Celeron Models)	10.4" XGA color TFT with 1024 x 768 resolution and 400 cd/m² brightness
	DLT-V8310 (Celeron Model)	10.4" SVGA color TFT with 800 x 600 resolution and 400 cd/m² brightness
	DLT-V8312 (i5 and Celeron Models)	12.1" XGA color TFT with 1024 x 768 resolution and 500 cd/m² brightness
	DLT-V8315 (i5 and Celeron Models)	15.1" XGA color TFT with 1024 x 768 resolution and 400 cd/m² brightness
Touchscreen	Type	High-impact tolerant touchscreens available with two control types: - Resistive touchscreen with 5/26 x control buttons - Projected capacitive multi-touch screen with 9 x control buttons - Sunlight-readable resistive touchscreen with 26 x control buttons (Celeron model only)
Control Buttons	Front Panel	5/9/26 x control buttons
Software	Operating System	Windows 10 IoT Enterprise, WES 7, Win7 Pro, WE 8.1 Industry Pro((on request), Linux (on request)
	Emulations (Third-Party)	VT100, VT220, IBM 5250, TN 3270, Citrix Client®, Freefloat Access One
Communication	WLAN	WLAN IEEE 802.11 a/b/g/n/ac (Optional)
	WWAN	WWAN (LTE, UMTS, HSPA+, GSM, GPRS, EDGE) (Optional)
	LAN	Ethernet 10/100/1000 Mbit/s with optional secondary Ethernet
	WPAN	Bluetooth 4.2 (Optional)
I/O Interfaces	Serial	2 x RS-232, alternatively 1 x RS-232 and RS-422/485
	USB	4 x USB 2.0 (Hi-Speed™) bootable, 1 x service USB
	CAN	Optional
	External Antennas	2 x RSMA for WLAN, 2 x SMA for WWAN (optional)
Audio		1 x integrated speaker (2W)
Power Supply (Internal)		12/24/48 V_{DC} nominal voltage with automatic Power On/Off functionality via vehicle ignition and optional uninterruptible power supply (10 minutes typical); 110/230 V_{AC}, 50/60 Hz, optional for DLT-V8315
Environmental	IP Rating	IP66 rating for the entire system
	Touchscreen Durability	IK08 according to IEC 62262
	Operating Temperature	-30 ~ 50 °C (-22 ~ 122 °F)
	Relative Humidty	10 to 90% at 40 °C (104 °F), non-condensing
	Shock/Vibration	5M3(EN 60721-3-5) for 10" and 12", 5M2 (EN 60721-3-5) for 15" and MIL-STD 810F (US highway truck vibration exposure)
Certification		CE Immunity Class A, Emission Class B/FCC Class B, CCC (for China), MIC (for Japan)

Dimensions

Unit: mm

DLT-V8310

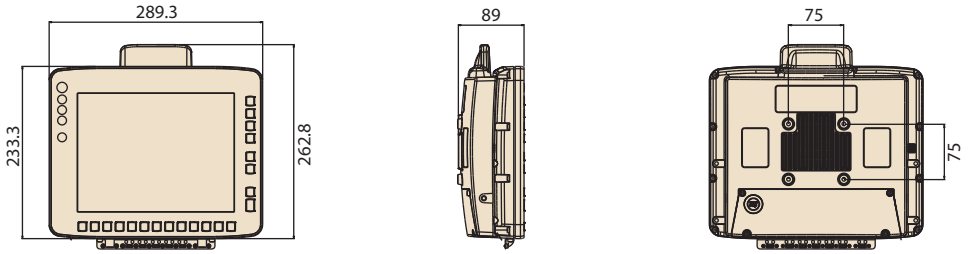

DLT-V8312

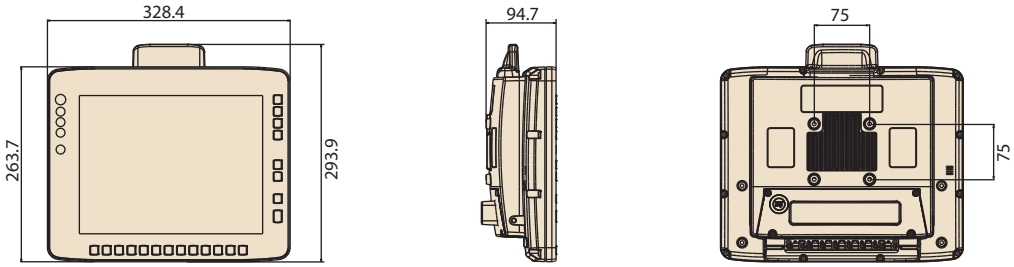

DLT-V8315

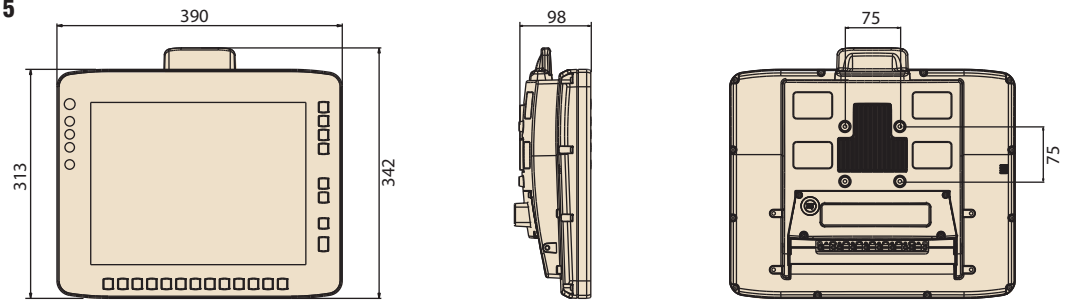

Ordering Information

Part Number	Description	Display	CPU	Touch	Power
DLV8310-1G100F0	DLT-V8310C FL barebone 4GB res SVGA 26key	10.4" SVGA	Intel® Celeron® 2980U Dual Core 1.6 GHz	Resistive touch	DC
DLV8312-1A100F0	DLT-V8312C FL barebone 4GB res XGA 5key	12.1" XGA	Intel® Celeron® 2980U Dual Core 1.6 GHz	Resistive touch	DC
DLV8315-4J300F0	DLT-V8315i5 FL barebone 8GB PCT XGA 9key	15.1" XGA	Intel® Core™ i5- 4300U Dual Core 1.9 GHz	PCT Touch	AC

Further configurations on request!

Optional Accessories

Part Number	Description
DL-MTKT009	Mobile Mounting Bracket
DL-MTRM004	RAM-Mount Set, one arm, arm length 130mm
DL-MTRM003	RAM-Mount Set, one arm, arm length 215mm
DL-MTRM001	RAM-Mount Set, two arms, arm length 150mm

Further configurations on request!

Mobile Mounting Bracket

RAM-Mount Set (one arm)

RAM-Mount Set (two arms)

I/O Connectors

VDC

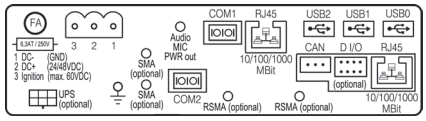
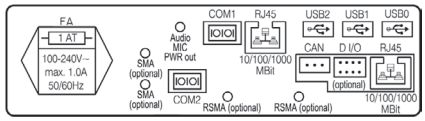
VAC –option only available for DLT-V8315