UCAM-120

2D Smart Counting Camera
Human Head Detection

Features

- Intelligent all-in-one device for data capture, analysis and delivery
- Easy installation and configuration via web browser
- High counting accuracy rate up to 95%
- Local storage data for counting report
- Comprehensive API for data integration

Introduction

Among single-lens video sensors, Advantech UCAM 2D Smart Counting Camera can achieve the highest accuracy at affordable price with its powerful data capturing and built-in analytic function. It is ideal for use in indoor environments with low to medium passenger flow for traffic intelligence purposes including bi-directional traffic flow counting. Traffic data from up to eight zones can be collected in real-time, packaged in XML format and delivered to the cloud or local server for generating business reports that can be customized based on customer needs. With open interface and good compatibility, Advantech's UCAM 2D Smart Counting Camera enables businesses to integrate people counting system with other systems such as ERP, CRM or Business Intelligence. The device also supports recessed and wall mounting or ceiling mounting for flexible installation while blending in with any interior or exterior.

Advantages

Higher Accuracy
UCAM can capture 15 frames per second and contains bi-directional traffic flow counting technology which enables a better data processing efficiency and reaches counting accuracy up to 95%.

Simple Install and Scale Up
Recessed mounting design of UCAM can fit with the sophisticated decoration of the retail stores. With power over Ethernet, the UCAM only require installing one cable to enable both network and data transmission which would speed up the install efficiency to large amount implement.

Comprehensive Data Integration
UCAM collects the counting data and packaged them into an XML format that can be retrieved quickly through RESTful API, thus can be customized and integrated to any solutions.

Simple Setting
Only require 1x network port for power supply and data transmission purpose is required in the installation process. The data remains in the device to 60 days even if the network disconnected.

昊生研华科技 15323726600

People Counting Analytic

The device integrates video analytic and data management at the edge, providing a 95% of counting accuracy in large traffic circumstance.

Store BI Traffic Report

Users can purchase the UCAM 2D Camera with Store BI cloud service. With open RESTful API supported, users can integrate the data and optimize the store management through SaaS service in a more efficient way.

All product specifications are subject to change without notice.
Last updated: 26-Dec-2019

Specifications

Software	Counting Type	Head Detection
	Software Feature	Counting
Hardware	Materials	Shell: Flame Retardant Polycarbonate (UL94 V-0 Flame Class Rating or Equivalent)
	Device	95 x 95 x 58 mm
	Package Box	155 x 155 x 132 mm
	Weight	0.5kg
	Power	5W
	Lens Options	2.2mm wide-angle lens
	Internal Storage	512MB DDR3
	Flash	8GB EMMC
	Network	100M Ethernet
	RTC working time	Minimum 3 days after a power outage
	LED	3 tri-state LED
	Power Supply	13.5W POE, IEEE 802.3af PoE Class 3
Work Environment	Working Temperature	0°C – 50°C
Function	Mounting Height	2.3m – 5m
	Mounting Angle	Support horizontal or tilt installation Up to 45. Tilt installation may degrade counting accuracy.
	Maximum Counting Area	6
	Maximum Tracking Capability	20 - 50 people simultaneously
	Data Preserve	Maximum 2 months data preserved after network disconnect (subject to configuration setting)

Dimensions

Unit:

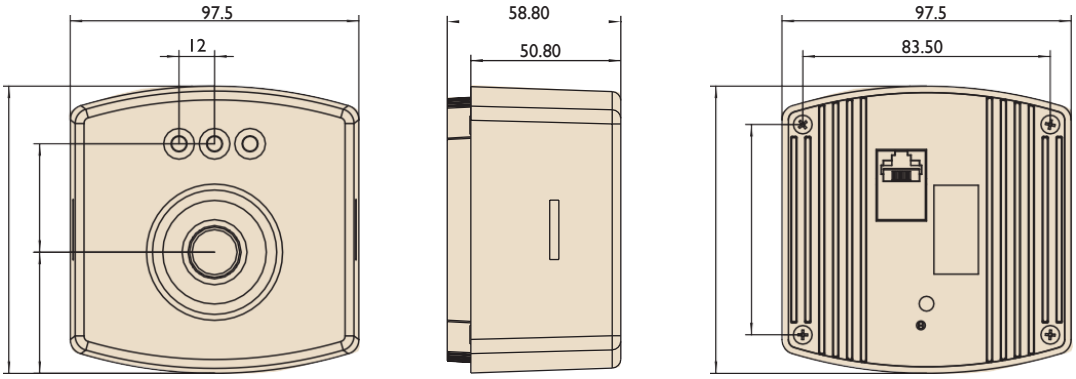

Recessed Mount

Unit:

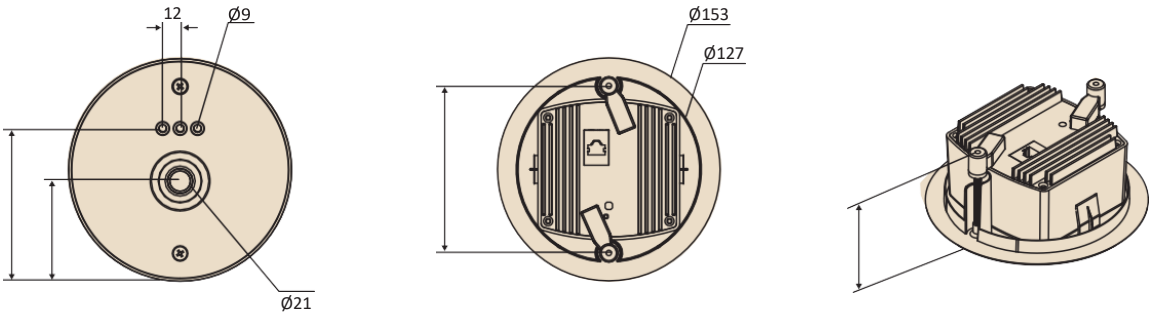

Ordering Information

Part Number	Description
USM-120A-U01	2D Smart Counting Camera with recessed mounting kit