Video AI Facial Recognition Edge

Features

- CPU-Based analytics based on Deep Learning AI Algorithms
- Receive video from multiple video sources, including
  - IP cameras
  - RTSP streams
  - NVRs
- Facial Recognition service includes:
  - Person-of-Interest (POI) management
  - Live notification on VIP or blacklisted person arrival
  - Restful APIs to link with 3rd party systems
- Standalone attendance taking system, including
  - Investigation reports
  - Attendance reports

Introduction

Video AI Facial Recognition Edge is an intelligent sever for facial recognition applications. Face Recognition System (FRS) included with complex AI and Deep Learning Algorithm, resulting in fast recognition performance with veracious results. Capable of recognizing faces on highly complex environments within 3.5 meters camera height installation and as low as 35 LUX ambient light conditions. FRS supports a wide range of video sources including: RTSP streams, IP Cameras, and Multi-brand 3rd party Network Video Recorders (NVR).

Key Functions

Person of Interest (POI) Management

- Enroll persons of interest using a web Portal or through Mobile App.
- Assign each person into one or more groups for easier identification (i.e. VIP, Blacklist, Staff, Visitor).
- Trigger automated actions upon POI / Group detection, or on schedule.

Live Notification and Alerts

- Real-time Notification via email, app, alert whenever a POI has been identified.
- Notification App available for iOS and Android devices

Multiple Video Sources

- Supports a wide range of industry standard video sources, including RTSP Camera Stream, NVR, or CMS

Secure user management

- Supports multiple system groups and user roles
- Supports single device login connection

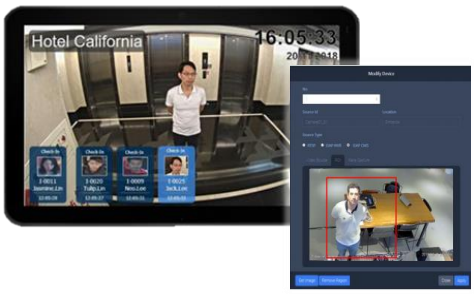

Comprehensive Reports

- Detailed reports for recognized and unknown faces
- Daily attendance reports with POI Entry/Exit records
- Option to enable search filters for a seamless investigation
- Export results to Excel & HTML format for further analysis

Flexible Design & Configuration

- Configurable recognition threshold and face capture frequency
- Configurable minimum face capture size
- Configurable Region of Interest (ROI)
- Auto-flip and mirror function on face enrolment

Reliable on Different Environments

- Recognize faces within 3.5 meters camera height mounting location
- Accurate down to 35 LUX ambient light condition
- Supports Video feeds in Color & Monochrome mode

In-Depth Integration Capabilities

- Integrate with a wide a variety of application scenarios ranging from: welcome signages to turnstile face authentication to validate person's face.
- Integrate with Face Tracking System to identify and track POIs (VIPs, Blacklisted, Staff, etc.) and their associates
- Validate visitors' identifications using Visitor Management System kiosks
- RESTful API available

吴主研究科技 15323779869

All product specifications are subject to change without notice.

Last updated: 12-Jan-2020

Video AI Facial Recognition Edge Software Specifications

System	Operating System	Ubuntu Linux
	Protocol	HTTP, HTTPS
	System Security	Single login connection Support HTTPS
	Supported Virtual Machine	VMWare, Hyper-V
Management Interface	Interface	Web Client
	Supported Browsers	Google Chrome on Windows, Linux, and Mac OS X
	Languages	English, Traditional Chinese
Video Source	Supported Video Sources	RTSP Streams, IP cameras, 3rd Party NVRs
	Supported Camera Types	Any standard RTSP H.264 camera
	Face Capture Parameters	Capture face size, default 100x100 pixel Side face capture options
	Face Verify Parameters	Capture face interval Face verify threshold Merge recognized faces interval Merge unknown faces interval
	Counting trigger	The bottom of the object
Environmental Adaptability	Camera Height	3.5 meters max. camera height mounting
	Ambient Light	Min. 35 LUX
	Supported Image Modes	Color and monochrome images
	Robust Against	Changes in face expressions, beard, and/or use of eyeglasses, caps, scarfs, etc.
System Users Management	System Users	Register user accounts using name, email address, and phone number
	User Groups	Default Administrator and User group, and user-defined groups
	Group Permissions	Administrator group can setup the system User and user-defined groups can only run attendance / investigation reports
Person of Interest Management	POI Management	Enroll person using mobile app or web client Manage person database through web portal
	Person Group	VIP, Blacklist, or user defined person group
	Batch Enrollment	Supports batch uploading using CSV and JPG files
	Photo Enrollment Requirements	Min. face size: 200x200 pixel Max. photo size: 1 MB (JPG or PNG)
	POI Profile Information	Name, person ID, card ID, PIN number, fingerprint file, email, group(s)
Investigation Reports	Search Filters	Filter face results by video source, time period, person's name, person group or stranger
	Search by Photo	Upload the POI's photo and infer the most similar faces (1:N)
	Similar Faces	List the top 3 of the most similar persons
	Stranger Acknowledgement	Acknowledge a stranger as an enrolled person
	Stranger Enrollment	Enroll a stranger to person database
	Data Export Format	Export face results in HTML or Excel format
Attendance Reports	Attendance Report	Supports daily, weekly, monthly, and yearly reports
	Exception Filters	Filter by 'absence', 'late arrival', or 'early leave'
	Data Export Format	Export results in HTML or Excel format
Rules and Actions	Rule Engine	Rule based engine to trigger single or multiple system actions based on Capturing video source(s) Detection time period POI/ person group(s) name
	Supported System Actions	HTTP command Email Mobile app notification Trigger IO Box Trigger Wiegand Box
Live Notifications	Supported Platforms	iOS and Android
	Notification Type	Realtime notification to mobile app for VIP or blacklisted person
Performance	Face Capturing Speed	Up to 30 faces per second
	Face Recognition Speed	Up to 20 faces per second Up to 20 faces per second in the same frame

All product specifications are subject to change without notice.

Last updated: 12-Jan-2020

Video AI Counting Edge Hardware Specifications

Part Number		USM-260VFR-G1E-C
Software	Software	Facial Recognition System
	Software Feature	Facial recognition Standalone attendance taking system
	Maximum Analyzing Channels	4 Camera Sources
Hardware	CPU	Intel® Core i7-7700T, 2.9 GHz
	RAM	16 GB DDR4, 2400 MHz
	Graphics	Integrated Intel® HD Graphics 530
	Storage	1 x SATA 2.5" HDD (1 TB)
	Internet	1 x RJ45 (10/100/1000 Mbps)
	I/O	4 x USB, 2 x COM
	Power	90W (19V power adapter)
	Size	240 x 210 x 57 mm
	Weight	3.5 kg
Environment	Temperature	With 2.5-inch hard disk 0 ~ 40° C (32 ~ 104° F)
	Humidity	90% @ 40° C (non-condensing)
	Vibration	With HDD: 0.5 Grms, IEC 60068-2-64, random, 5~500Hz, 3 axes, 1hr/axis
	Shock	With HDD: 10 G, IEC 60068-2-27, half sine, 11 ms duration

DimensionSpecification

Dimensions

Unit: mm

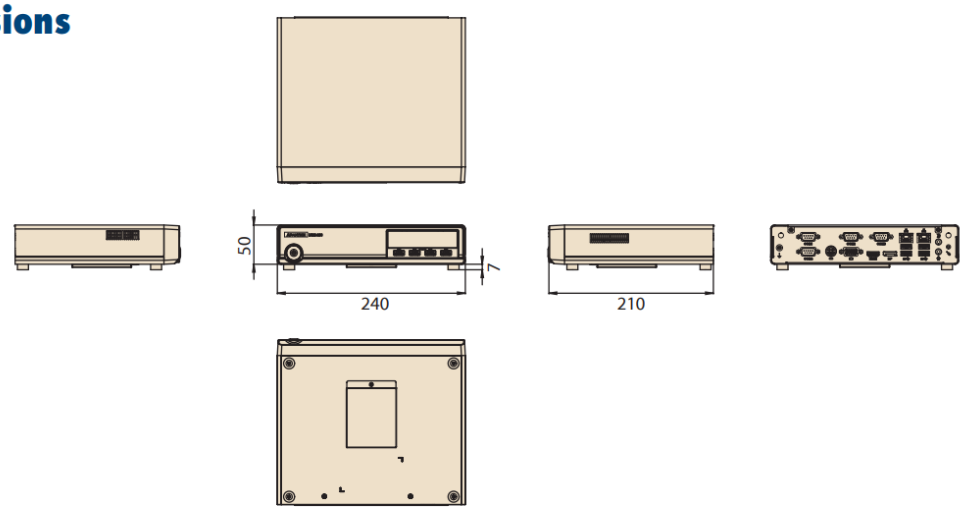

Fully- Integrated I/O

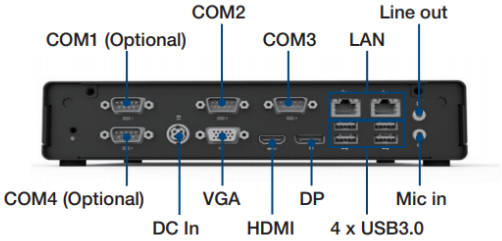

Ordering Information

P/N	Description
USM-260VFR-G1E-C	Video AI Facial Recognition Edge

All product specifications are subject to change without notice.