UTC-520

21.5" Ubiquitous Touch Computer
UTC-520I with Intel® Core™ i5-1145G7E

Features

- Low-power, fanless system design
- Built-in Intel® Core™ i5-1145G7E (UTC-520I)
- 21.5" monitor with 16:9 widescreen display
- IP65-rated front panel for water and dust resistance
- All-in-one aluminum extrusion design
- Supports both landscape and portrait screen orientations
- VESA 100 mm standard mounting holes for varied mounting demands
- Side groove design for integrating peripherals
- Optional 400-nit LCD panel
- Support DeviceOn/iService software for remote device management
- i3 and i7 sku are available for I platform
- I platform supports TPM 2.0

Introduction

UTC-520 is an all-in-one computer with an Intel® Core™ i5-1145G7E processor, widescreen LCD touch panel, and side grove design for integrating optional peripherals. Designed for diverse self-service, content broadcasting, and interactive signage applications, UTC-520 systems can be deployed in a wide range of usage scenarios for enhancing enhance customer satisfaction, furthering brand equity, and maximizing business profits. Advantech's DeviceOn/iServiceis a next-generation unified device management solution based on the WISE-DeviceOnplatform. Moreover, Advantech DeviceOn/iService Software is a next-generation unified device management unified device management solution based on the WISE-DeviceOn platform. With support for batch operations and multi-device control, DeviceOn/iService enables easy device configuration and deployment for convenient remote device management

Specifications

Model		UTC-520I
System	CPU	i5-1145G7E Intel® Core™ i3-1115G4E (available) Intel® Core™ i7-1185GRE (available)
	Base Frequency	1.50/ 2.6 GHz/ Quad Core
	Cache	L3 Cache 8MB
	Memory	DDR4-3200 up to 64GB
	HDD	1 x 2.5 internal SATA HDD bay
	Network (LAN)	2 x GbE, LAN1: Intel i219LM, LAN2: Intel i210AT/IT (supports Wake on LAN)
	I/O	2 x GbE, LAN1: Intel i219LM, LAN2: Intel i210AT/IT 1 x HDMI / 1 x DP 1 x Audio Line-out 1 x Mic-in 4 x USB3.2 Gen. 2x1 10Gbps 1 x USB type-C, USB3.2 Gen. 2x2 20Gbps, support DP1.4a via Alt. Mode
	Stereo Speaker	2 x 3W
	Expansion	1 x M.2 E-Key 2230 (PCIe x 1, USB2.0, I2C) 1 x M.2 B-Key 3042 (USB2.0) w/ Nano-SIM 1 x M.2 M-Key 2280 (PCIe x4 Gen.4 for PCIe SSD), optional SATA
Mechanical	Mount Options	VESA 100 x 100 mm
	Dimensions (W x H x D)	517.6 x 313.51 x 43.5 mm
	Weight	8 kg (17.6 lb)
Board Features	Watchdog Timer	65536 intervals, 0 ~ 65535 sec
	TPM	TPM2.0 (SLB9670XQ2.0)
Operating System		Windows 10 IoT Enterprise
Environmental	Operating Temperature	0 ~ 40 °C/32 ~ 104 ° F
	Relative Humidity	10 ~ 95% @ 40 °C/104 °F, non-condensing
	Shock	Operating 10G peak acceleration (11ms duration), follow IEC 60068-2-27
	Vibration	Operating Random Vibration Test 5 ~ 500Hz, 1Grms @with HDD; 2Grms @with SSD, follow IEC 60069-2-64
	EMC/Safety	CE (RED Compliance), EN 61000-6-2: 2005 /AC: 2005, FCC, UL, CB, CCC, BSMI
	Front Panel Protection	IP65 rated/NEMA4 compliant
Power Supply	Input Rating	12~24V, 7 A (84W ITE adapter)
	Power Consumption	Typical 40W Max 50W
LCD Display	Size/Type	21.5" TFT LCD with LED backlight
	Max.Resolution	1920 x 1080
	Max. Color	16.7M
	Pixel Pitch (H x V)	248.25 x 248.25
	Brightness	250 nits (400 nits optional)
	Viewing Angle	178°/178°
Touchscreen (PE/RE)	Type	Projected capacitive, Single point Analog Resistive 5-wires touch
	Light Transmission	88% ± 2%, 80% ± 3%
	Controller	USB interface

All product specifications are subject to change without notice, * identify as optional function

Last updated: 4-Aug-2022

Specifications (Cont.)

DeviceOn/iService Remote Device Management	Operating System	Windows 10
	Common Controls (Reboot, Shutdown)	✓
	Remote desktop	✓ (VNC)
	Audio Controls	✓*
	Connection Status	✓
	Hardware Status	✓*
	Hard Disk Status	✓*
	Batch Operation Support	✓
	OTA Storage Management	FTP
	OTA Software Updates	✓
	Software Watchlist	✓
	Software Start/Stop	✓*
*Dependant on device model	Peripherals Watchlist	✓*

Note: DeviceOn/iService software must be downloaded from the Advantech website at https://www.advantech.com/search/?q=DeviceOn%2FiService&st=support&sst=Utility

Dimensions

Unit: mm

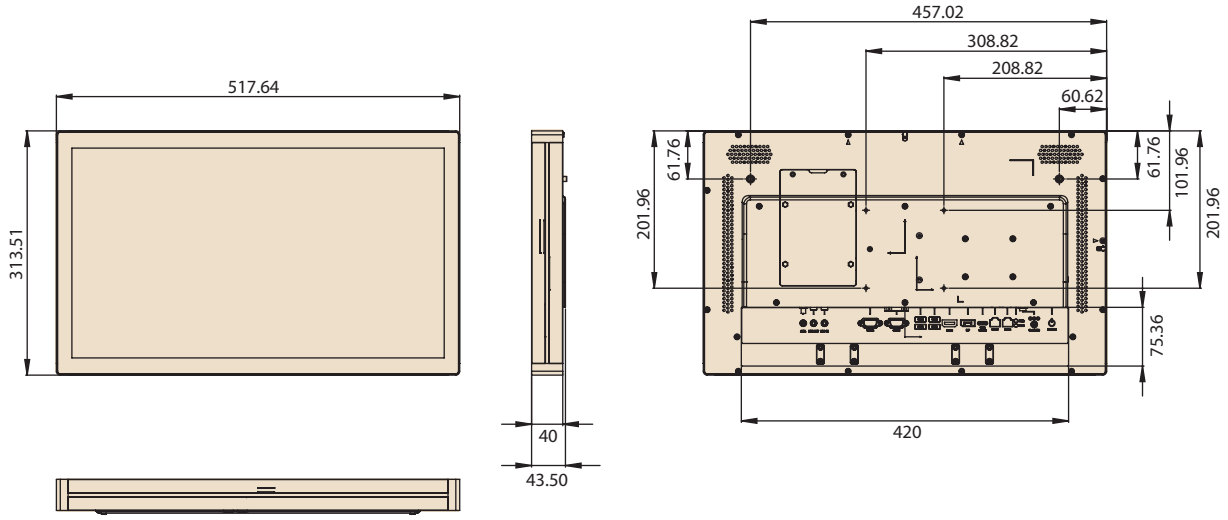

Ordering Information

Part Number	Description
UTC-520I-PE	21.5" 9H PCT.T/S with Intel® Core™ i5-1145G7E, 8GB RAM, IT Adapter
UTC-520IP-ATB0E	21.5" 7H PCT.T/S with Intel® Core™ i5-1145G7E, 8GB RAM, IT Adapter
UTC-520IR-ATB0E	21.5" Resi. T/S with Intel® Core™ i5-1145G7E, 8GB RAM, IT Adapter
1702002600	Power Cord 3P UL/CSA(USA) 125V 10A 1.83M 180D
1702002605	Power Cord 2P FRANCE 10A/16A 220V 1.83M 90D
1700000596	Power cable, CCC, 3P, 10A, 250V, 183 cm (China)
1700018704	Power cable, BSI, 2P, 10A, 250V, 180 cm (UK)
1960069544N001	I/O cover for UTC-520 series

Peripherals for UTC-500 Series

Part Number	Description
UTC-P01-A1E	5MP camera module (via USB)
UTC-P02-A0E	Magnet strip reader (via USB)
UTC-P03-A1E	RFID/NFC reader (via USB)
UTC-P06-A2E	Smart card reader (via USB)
UTC-P07-A4E	2D barcode module (Honeywell) (via USB)
UTC-P09-A0E	Fingerprint reader (via USB)
UTC-P21-A2E	4-in-1 barcode + RFID + MSR + card reader module

Optional Accessories

Part No.	Description
96PD-00824	UTK-700 Desktop Stand (w/o Printer)
96PD-00825	UTK-700 Extension Tower (For 96PD-00824 only)
UTC-520-STAND1E	Desktop stand for UTC-515/520
UTC-S01-STAND	Desk Stand for 100 x 100 / 75 x 75 mm
UTC-T01-STANDE	Triangle shape floor stand
UTC-H01-STANDE	H-shaped floor stand
UTC-WALL-MOUNT1E	Wall Mount kit for UTC-515/520
UTC-WALL-MOUNT3E	Wall Mount kit for UTC-515/520

UTC-520 WiFi Ordering Information

Part No.	Description
UTC-WIFI-A4E	EWM-W163M201E 802.11ac/a/b/g/n 2T2R WIFI with BT 4.1 QCA6174A, M.2 2230
UTC-WIFI-A5E	EWM-W159M201E 802.11 ac 2T2R with BT 5.0 2.4GHz+5GHz A-E key M.2 2230

Fully Integrated I/O

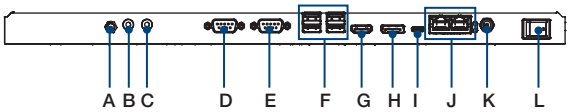

A. Antenna Port
B. Line-out
C. Mic-in
D. COM2
E. COM1
F. USB 3.0 x 4
G. HDMI
H. DP
I. USB type c
J. LAN Ports x 2
K. DC input
L. Power Switch

DeviceOn / iService

Unified Remote Device Management Software

Features

- Supports Advantech devices equipped with Windows, Android, and Linux OS
- Flexible device, location, user, and permissions management
- Enables remote monitoring and control of hardware, software, and peripherals
- Supports over-the-air (OTA) firmware and software updates
- Ensures quick, easy, and secure device onboarding
- RESTful APIs for third-party system integration

Introduction

Advantech's DeviceOn/iService is a next-generation unified device management solution based on the WISE-DeviceOn platform. Designed to enable centralized monitoring and remote management, DeviceOn/iService supports Advantech devices equipped with Windows, Linux, or Android operating systems. The software also supports the management of applications and integrated peripherals, such as a barcode scanner, card reader, camera, and printer. Users can remotely access and control connected devices, take screenshots, rollout OTA upgrades, and use remote desktop capabilities for troubleshooting from any location at any time. Moreover, DeviceOn/iService supports batch operations to facilitate the management of multiple devices simultaneously for easy and convenient device configuration and deployment.

Total Management

Devices & Hardware
- Windows, Linux, Android
- Hardware, storage, battery

Software & Peripherals
- Software monitoring & access
- Screens, USB devices, printers

Open for Expansion
- Peripheral integration
- Open APIs for integration

Remote Access

Real-Time Monitoring
- Connection/hardware status
- Software/peripheral status
- Failure notifications

Remote Controls
- Power controls
- Audio, backlight controls
- Software controls

Troubleshooting
- Screenshots
- Remote desktop support

Operational Efficiency

OTA updates
- System/software updates
- File repository management
- App store

Batch Controls
- 1-to-many batch reboot, etc.
- Time-saving tasks

Setup Booster
- Software/peripheral watchlist
- Roles, rule templates

Note: Some functions may vary according to the product
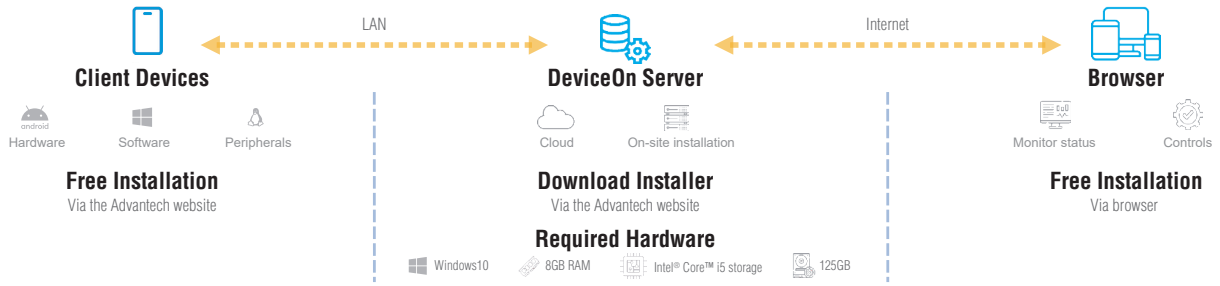
System Architecture