IMC-700

Modular Media Converter Chassis

Features

- Designed for a variety of media and mode conversion modules
- Supports a wide range of protocols and future-proof upgrade paths
- High flexibility for module combinations for different environments
- Supports AC or DC power
- Standard and extended temperature models available
- Provides 3/6/20-slot chassis that supports low to high density deployment
- Supports SNMP management that uses optional SNMP management module for 3/6/20-slot chassis
- Supports fan test feature

RoHS COMPLIANT 2002/95/EC CE FCC

Introduction

The IMC-71x series provides conversion of Ethernet-to-fiber and a variety of networking technologies. It enables network operators to drastically reduce the capital and operational expenses by providing all copper-to-fiber and multi-mode to single-mode conversions and network distance extensions. This modular approach allows network operators to inexpensively change protocols by simply changing the module rather than the entire unit. With AC or DC power options, it is a economical way to overcome a variety of media and mode conversion challenges.

The IMC-713/716/719 series has the highest port density in the industry -- along with a robust design, hot-swappable architecture, SNMP management via iView[2], and redundant power supplies for fault tolerance, which a diverse range of applications, using a variety of protocols, require. The temperature controlled fans in the IMC-713/716 chassis activate only when the chassis reaches a certain temperature, thereby extending the life of the fans. The fans on the IMC-719 series can be remotely controlled via SNMP.

Part Number	IMC-711-AC	IMC-711I-AC & IMC-711I-DC	IMC-712-AC	IMC-712I-AC & IMC-712I-DC
# of slot	1	1	2	2
Dimensions (H x W x D)	3.81 x 12.03 x 18.54 cm (1.5 x 4.74 x 7.3 inch)	AC: 2.28 x 10.92 x 10.16 cm (0.90 x 4.30 x 4.00 inch) DC: 3.81 x 12.03 x 18.54 cm (1.5 x 4.74 x 7.3 inch)	5.81 x 12.03 x 18.54 cm (2.29 x 4.74 x 7.3 inch)	5.81 x 12.03 x 18.54 cm (2.29 x 4.74 x 7.3 inch)
Weights	0.73 kg (1.6 lbs)	AC: 0.27 kg (0.6 lbs) DC: 0.73 kg (1.6 lbs)	0.86 kg (1.9 lbs)	0.86 kg (1.9 lbs)
AC Power Input	100 -240 V_{AC}, 50/60Hz, 1.0A	100 -240 V_{AC}, 50/60Hz, 1.0A	100 -240 V_{AC}, 50/60Hz, 1.0A	100 -240 V_{AC}, 50/60Hz, 1.0A
DC Power Input	-	DC Terminal: 7-50V DC, 3A-0.1A (IMC-711I-AC) 35 – 75 VDC, 500mA (IMC-711I-DC)	-	35 – 75 V_{DC}, 1.5A@75V_{DC}
MTBF	463,377 hours	463,377 hours (IMC-711I-AC) 786,637 hours (IMC-711I-DC)	471,063 hours	239,918 hours (IMC-712I-AC) 606,916 hours DC (IMC-712I-DC)
Operating Temperature	0 to +50 °C (+32 to +122 °F)	-40 to +70 °C (-40 to +158 °F) (IMC-711I-AC) -35 to +80 °C (-31 to +176 °F) (IMC-711I-DC)	0 to +50 °C (+32 to +122 °F)	-20 to +70 °C (-4 to +158 °F) (IMC-712I-AC) -35 to +80 °C (-31 to +176 °F) (IMC-712I-DC)
Storage Temperature	-40 to +85 °C (-40 to +185 °F)	-40 to +85 °C (-40 to +185 °F)	-40 to +85 °C (-40 to +185 °F)	-40 to +85 °C (-40 to +185 °F)
Operating Humidity	5 ~ 95% (non-condensing) 0 to 10,000 feet altitude			
Cerifications	IMC-711-AC, IMC-711I-AC, IMC-712 series: FCC Class A, UL/cUL, CE,CSA IMC-711I-DC, IMC-712I-DC: FCC Class B, UL,cUL, CE, CSA			

Part Number	IMC-713 series	IMC-716 series	IMC-719 series
# of slot	3	6	20
Dimensions (H x W x D)	4.57 x 22.19 x 19.05 cm (1.8 x 8.74 x 7.5 inch)	4.57 x 48.26 x 27.05 cm (1.8 x 19 x 10.65 inch)	13.13 x 48.26 x 35.56 cm (5.17 x 19.0 x 14 inch)
Weights	2.3 kg (5 lbs)	5.90 kg (13 lbs)	13.6 kg (30 lbs)
AC Power Input	100–240V AC, 50-60Hz, 0.75A	100-240V AC, 50-60Hz, 1.0A	100-240V AC, 50-60Hz, 4.5/2A
DC Power Input	35–75V DC, 1.6A	48V DC, 2.0A	-48V DC, 9A
MTBF	172,706 hours (IMC-713-AC) 147,903 hours (IMC-713-2AC) 133,919 hours (IMC-713-ACDC) 172,394 hours (IMC-713-DC) 162,893 hours (IMC-713-2DC)	865,320 hours	372,982 hours (IMC-719-2AC) 372,739 hours (IMC-719-2DC)
Operating Temperature	0 to +50 °C (+32 to +122 °F)		
Storage Temperature	-20 to +80 °C (-4 to +176 °F) -20 to +60 °C (-4 to +140 °F) (IMC-713-2DC & IMC-716-2DC & IMC-719-2DC)		
Operating Humidity	5 ~ 95% (non-condensing) 0 to 10,000 feet altitude		
Cerifications	FCC Part 15 Subpart B Class B FCC Part 15 Subpart B Class A (IMC-716-2AC) UL/cUL, CSA, CE		

Dimensions

Unit: inch

IMC-711-AC & IMC-711I-DC

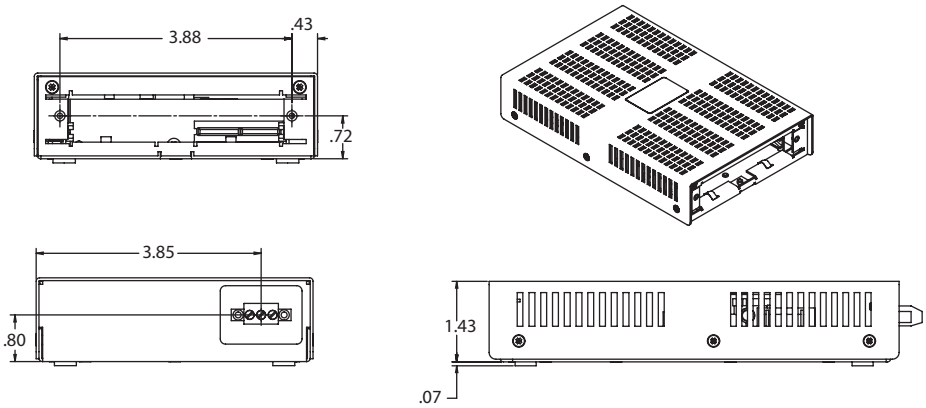

IMC-711I-AC

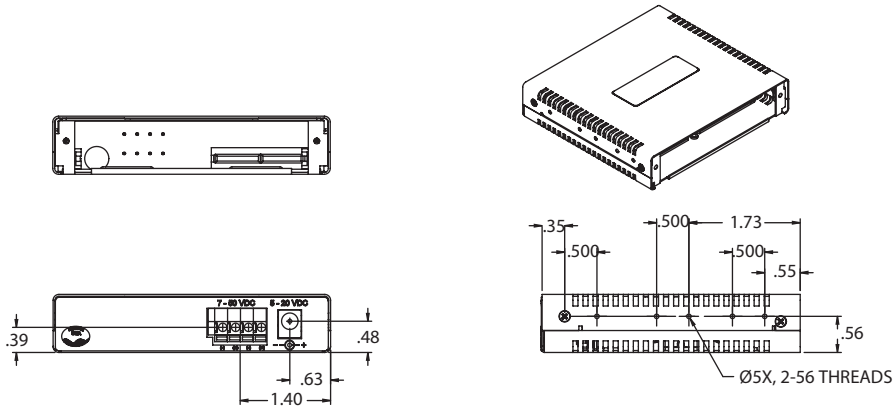

IMC-712 series

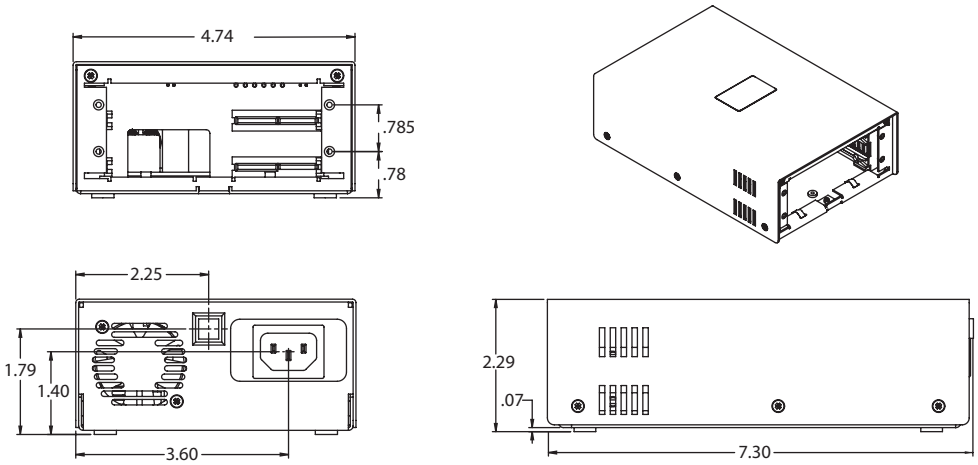

Dimensions

Unit: inch

IMC-713 series

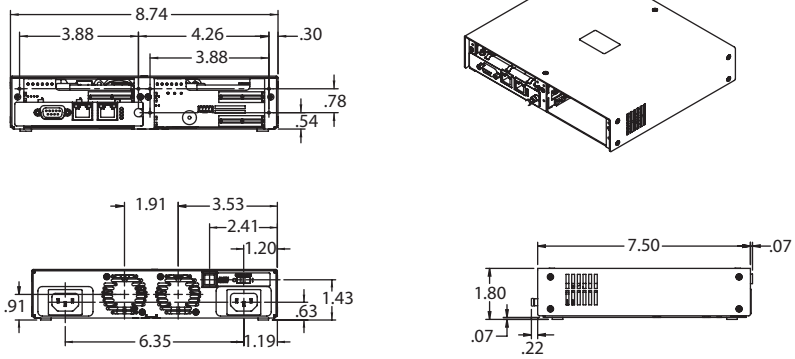

IMC-716 series

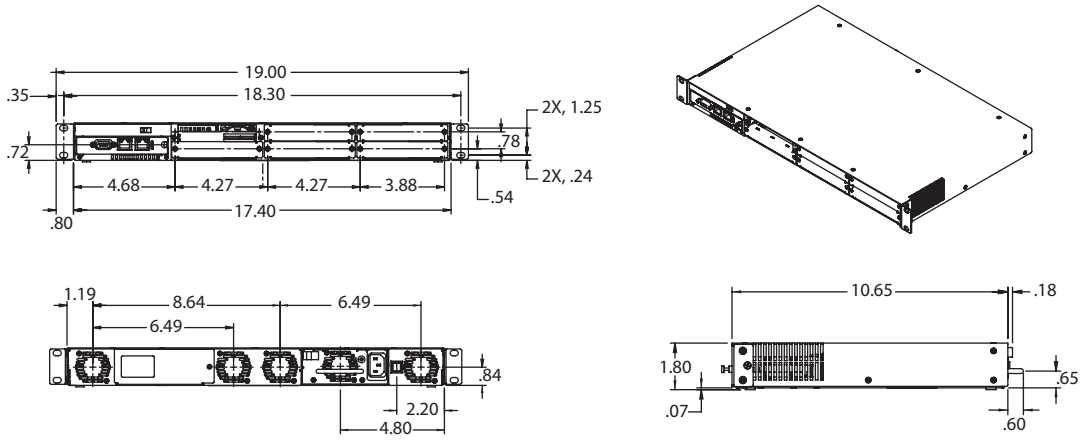

IMC-719 series

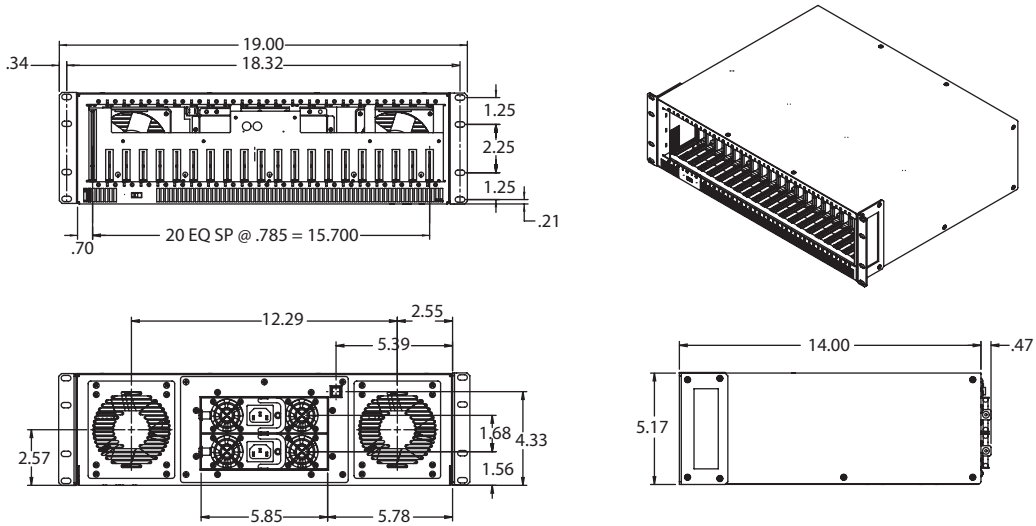

Ordering Information

Modular Media Converter Chassis

Part Number	Also Known As	Slot	Extended Temperature	Power Input
IMC-711-AC-US	850-13100	1	-	AC
IMC-711-AC	-	1	-	AC
IMC-711I-AC-PS	850-33100	1	Yes	AC
IMC-711I-DC	850-32105	1	Yes	DC
IMC-712-AC-US	850-13101	2	-	AC
IMC-712-AC	-	2	-	AC
IMC-712I-AC-US	850-13106	2	Yes	AC
IMC-712I-AC	-	2	Yes	AC
IMC-712I-DC	850-32106	2	Yes	DC

* Power Modules sold separately – available at www.advantech.com

SNMP-Manageable Modular Media Converter Chassis

Part Number	Also Known As	Slot	Power Input
IMC-713-AC-US	850-10949-AC	3	Single AC
IMC-713-AC	-	3	Single AC
IMC-713-2AC-US	850-10949-2AC	3	Dual AC
IMC-713-2AC	-	3	Dual AC
IMC-713-DC	850-10949-DC	3	Single DC
IMC-713-2DC	850-10949-2DC	3	Dual DC
IMC-713-ACDC-US	850-10949-ACDC	3	1 x AC + 1 x DC
IMC-713-ACDC	-	3	1 x AC + 1 x DC
IMC-716-AC-US-A	850-10953-AC-A	6	Single AC
IMC-716-2AC-US-A	850-10953-2AC-A	6	Dual AC
IMC-716-DC	850-10953-DC	6	Single DC
IMC-716-2DC	850-10953-2DC	6	Dual DC
IMC-719	605-10144-10	20	-
IMC-719-2AC-US	605-10144-2AC	20	Dual AC
IMC-719-2AC	-	20	Dual AC
IMC-719-2DC	605-10145-2DC	20	Dual DC

Accessories (optional)

Part Number	Description
806-39105	DIN Rail Clip (For IMC-711I-AC)
895-39226	Rackmount Bracket (For IMC-711 & IMC-712 series)
895-39227	Wall-mount Bracket (For IMC-711 & IMC-712 series)
895-39229	Wall-mount Bracket (For IMC-711I & IMC-712I series)
IMC-716-PS-AC-A	Spare AC Power Supply (120W)(for IMC-716)
806-39125-DC	Spare DC Power Supply (125W) (For IMC-716)
605-10144-AC	Spare AC Power Supply (300W, 100-240V AC) (For IMC-719)
605-10144-DC	Spare DC Power Supply (300W, -48V DC) (For IMC-719)