SOM-DB4700

ETX/XTX Development Board

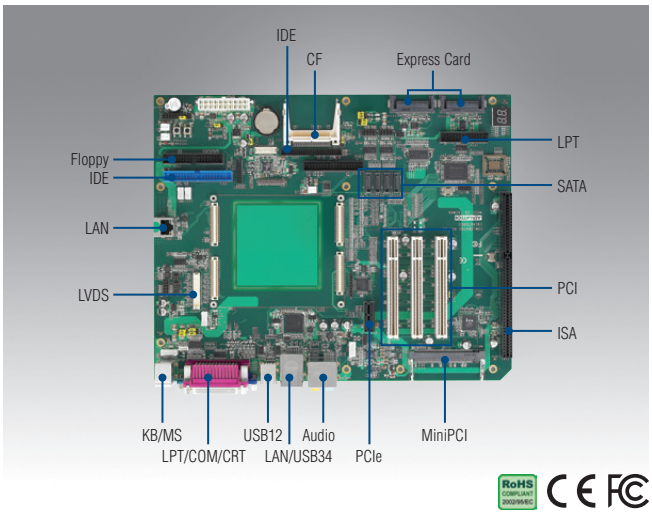

Features

- ETX/XTX Development Board
- ATX form factor
- Display type: LVDS, DVI, VGA, TV out
- Expansion: 2 Express Card, 3 PCI, 1 Mini PCI, 1 ISA bus slot
- SATA/EIDE/FDD/LPT/Keyboard/Mouse/USB/Audio/SSD interface

Specifications

Compatible Models		ETX	XTX
Display	LCD	TTL/LVDS (depends on CPU module)	TTL/LVDS (depends on CPU module)
	VGA	1	1
	DVI	-	1
	TV out	1	1
	Dual Display	TTL/LVDS, VGA, TV out	TTL/LVDS, VGA, TV out
Ethernet		1 x 10/100	1 x 10/100 + 1 Giga
Audio		AC97	High Definition Audio
Expansion	Express Card	-	2
	PCI	3	2
	Mini PCI	1	1
	ISA	1	1
I/O	SATA	-	4
	EIDE	1 x 40 pin + 1 x 44 pin	1 x 40 pin + 1 x 44 pin
	Serial	4 COM ports 3 x RS-232, 1 x RS-232/422/485	4 COM ports 3 x RS-232, 1 x RS-232/422/485
	USB	4 x USB 2.0	6 x USB 2.0
	LPT/FDD	1	1
	KB/MS	1	1
	CF	1	1
	System Fan	2	2
	SMBus	1	1
	I2C	1	1
	Port 80	1	1
Power	Power Type	ATX mode	
Environment	Operating Temperature	0 ~ 60° C (32 ~ 140° F)	
	Humidity	Operating: 40° C @ 95% relative humidity, non-condensing Storage: 60° C @ 95%relative humidity, non-condensing	
Mechanical	Dimensions	304.8 x 190.5 mm (12" x 7.5")	

吴生 研伟科技 15323276600

Block Diagram

(XTX)

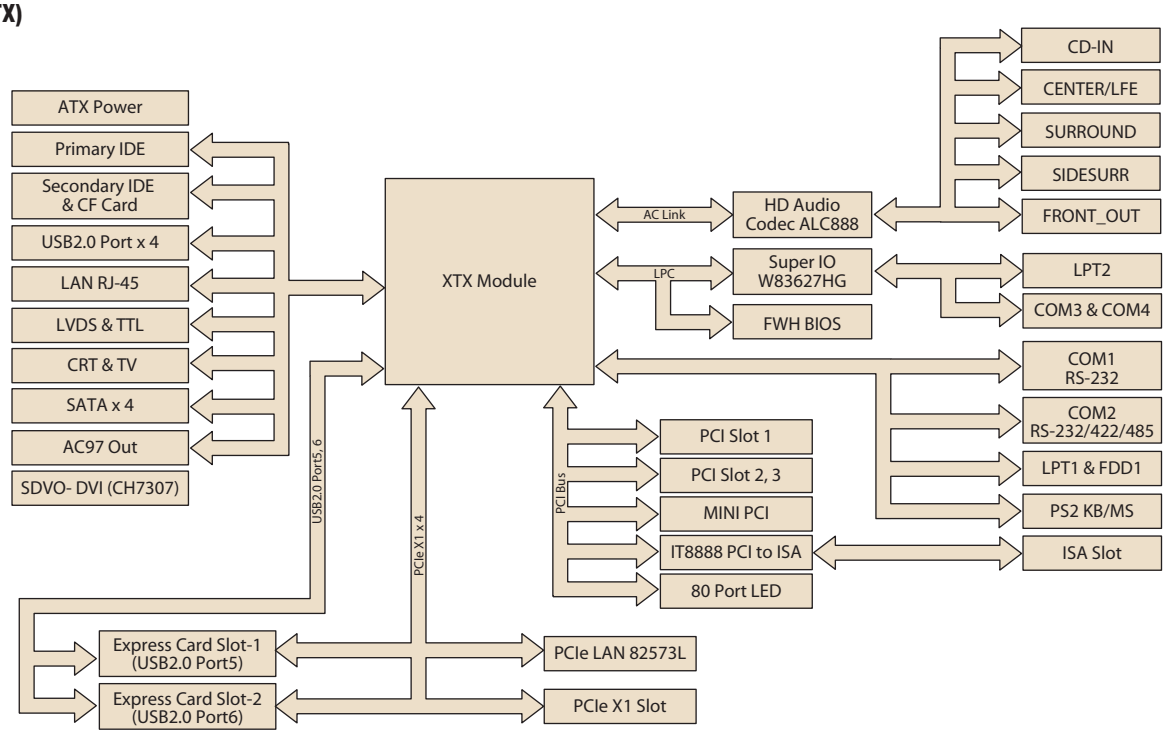

(ETX)

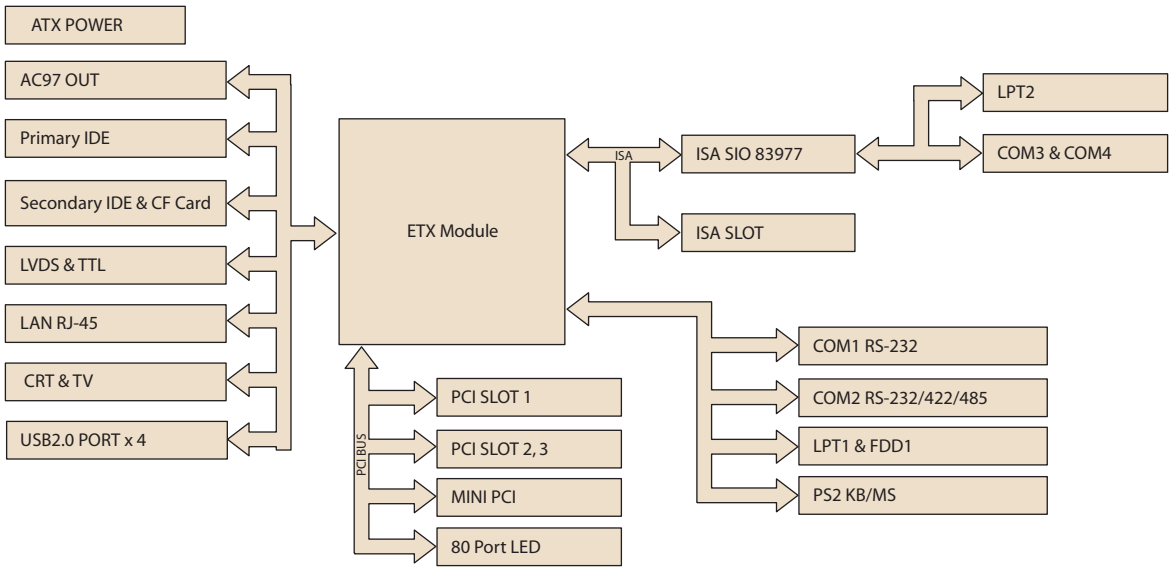

Ordering Information

Part No.	Description
SOM-DB4700-00A1E	Development Board for ETX Rev.A1
SOM-DB4700X-00A1E	Development Board for XTX Rev.A1

Packing List

Part No.	Description	Quantity
SOM-DB4700-00A1E	SOM-DB4700	1
1703050307	TV-Out Cable	1