# SOM-5894

## 4th Gen. Intel® Core™ Processor COM Express® Basic Module

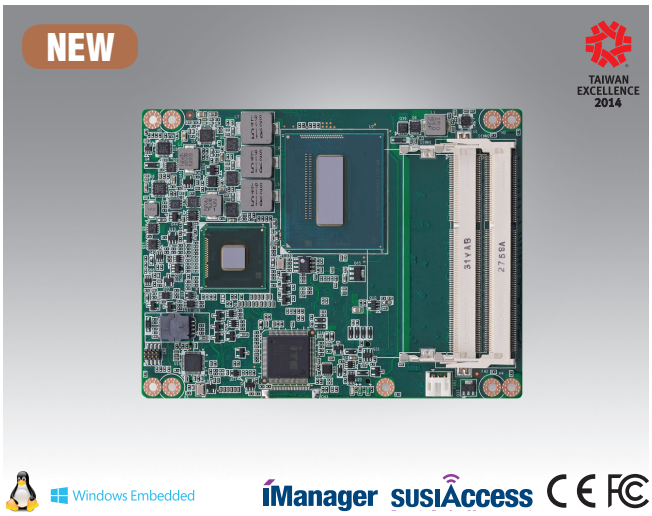


## Features

- 4th Generation Intel® Core™ Processors H-series + QM87
- Dual DDR3L-1333/1600 SODIMM sockets up to 16 GB
- Triple displays with outstanding graphics performance
- Multiple high speed interface, SATA III, USB3.0 and PCIe Gen3
- Supports iManager, SUSIAccess and embedded software APIs

**Software APIs:** Watchdog, I²C, SMBus, H/W Monitor, GPIO, Brightness Control

## Specifications

| | | | | | | | | |
|---|---|---|---|---|---|---|---|---|
| Form Factor | Form Factor | COM Express Basic Module | | | | | | |
| | Pin-out Type | COM Express R2.1 Type 6 | | | | | | |
| Processor System | CPU | i7-4700EQ | i5-4400E | i5-4402E | i3-4100E | i3-4102E | Celeron 2000E | Celeron 2002E |
| | Base Frequency | 2.4 GHz | 2.7 GHz | 1.6 GHz | 2.4 Ghz | 1.6 GHz | 2.2 GHz | 1.5 GHz |
| | Max Single Core Turbo Frequency | 3.4 GHz | 3.3 GHz | 2.7 GHz | 2.4 GHz | 1.6 GHz | NA | NA |
| | Core/Thread | 4/8 | 2/4 | 2/4 | 2/4 | 2/4 | 2/2 | 2/2 |
| | LLC | 6MB | 3MB | 3MB | 3MB | 3MB | 2MB | 2MB |
| | CPU TDP | 47W | 37W | 25W | 37W | 25W | 37W | 25W |
| | Chipset | QM87 | | | | | | |
| | BIOS | AMI EFI 128Mbit | | | | | | |
| Memory | Technology | DDR3L, 1.35V, 1333/1600 MHz | | | | | | |
| | ECC Support | A1: non-ECC, B1: ECC | | | | | | |
| | Max. Capacity | 16 GB | | | | | | |
| | Socket | Dual 204P SODIMM | | | | | | |
| Graphics | Controller | Intel HD Graphics 4600 | | | | | | |
| | Max. Frequency | 1 GHz | 900 MHz | 900 MHz | 900 MHz | 900 MHz | 900 MHz | 900 MHz |
| | Graphic Memory | Intel DVMT 5.0 support up to 1024MB video memory | | | | | | |
| | 3D/HW Acceleration | Gen 8, DX11.1, OpenGL 4.0, OpenCL 1.2 and AVC/VC-1, H.264, MPEG4 HW Encoder/Decoder | | | | | | |
| Display | VGA | 1920 x 1200 | | | | | | |
| | LCD | Single and dual channel 18/24-bit LVDS, up to 1920 x 1200, optional eDP 2 lanes up to 1920 x 1200 | | | | | | |
| | DDI | 3 DDI Ports support configurable HDMI/DVI/DisplayPort | | | | | | |
| | Dual Display | Combinations of HDMI/DVI/DisplayPort/VGA/LVDS | | | | | | |
| | Triple Display | Combinations of HDMI/DVI/DisplayPort/VGA/LVDS (Except 3 HDMI/DVI) | | | | | | |
| Expansion | PCI Express x16 | 1 Port supports PCI Express Gen3 8.0GT/s | | | | | | |
| | PCI Express x1 | 7 Ports support PCI Express Gen 2 5.0GT/s | | | | | | |
| | Audio Interface | HD Audio | | | | | | |
| | LPC | Yes | | | | | | |
| Serial Bus | SMBus | Yes | | | | | | |
| | I2C Bus | Yes | | | | | | |
| Ethernet | Controller | Intel i217 | | | | | | |
| | Speed | 10/100/1000 Mbps | | | | | | |
| I/O | SATA | 4 ports support SATA III 6.0Gb/s | | | | | | |
| | RAID | RAID 0/1/5/10 | | | | | | |
| | USB3.0 | 4 Ports | | | | | | |
| | USB2.0 | 8 Ports | | | | | | |
| | Audio | Intel HD Audio | | | | | | |
| | SPI Bus | Yes | | | | | | |
| | GPIO | 8-bit GPIO | | | | | | |
| | Watchdog | 65536 level, 0 ~ 65535 sec | | | | | | |
| | COM Port | 2 Ports (2-Wire) | | | | | | |
| | Express Card | 2 Ports | | | | | | |
| | TPM | Optional | | | | | | |
| | Smart Fan | 2 Ports; 1 Port on COM Module. Support 12V Fan, 1 Port on Carrier Board | | | | | | |
| Power | Type | ATX: Vin, VSB, AT: Vin | | | | | | |
| | Supply Voltage | Vin: 8.5(9-5%)~20V(19+5%), VSB: 5V±5%, RTC Battery: 2.0-3.3V | | | | | | |
| | Power Consumption (Max.) | (8G DDR3L 1600) i7-4700EQ: +12V @ 42.12W | | | | | | |
| | Power Consumption (Idle) | (8G DDR3L 1600) i7-4700EQ: +12V @ 8.52W | | | | | | |
| Environment | Temperature | Operating: 0 ~ 60° C (32 ~ 140° F)<br>Storage: -40 ~ 85° C (-40 ~ 185° F) | | | | | | |
| | Humidity | Operating: 40° C @ 95% relative humidity, non-condensing<br>Storage: 60° C @ 95%relative humidity, non-condensing | | | | | | |
| Mechanical | Dimensions | 125 x 95 mm (4.92" x 3.74") | | | | | | |

昊坤科技 15323776600

## Block Diagram

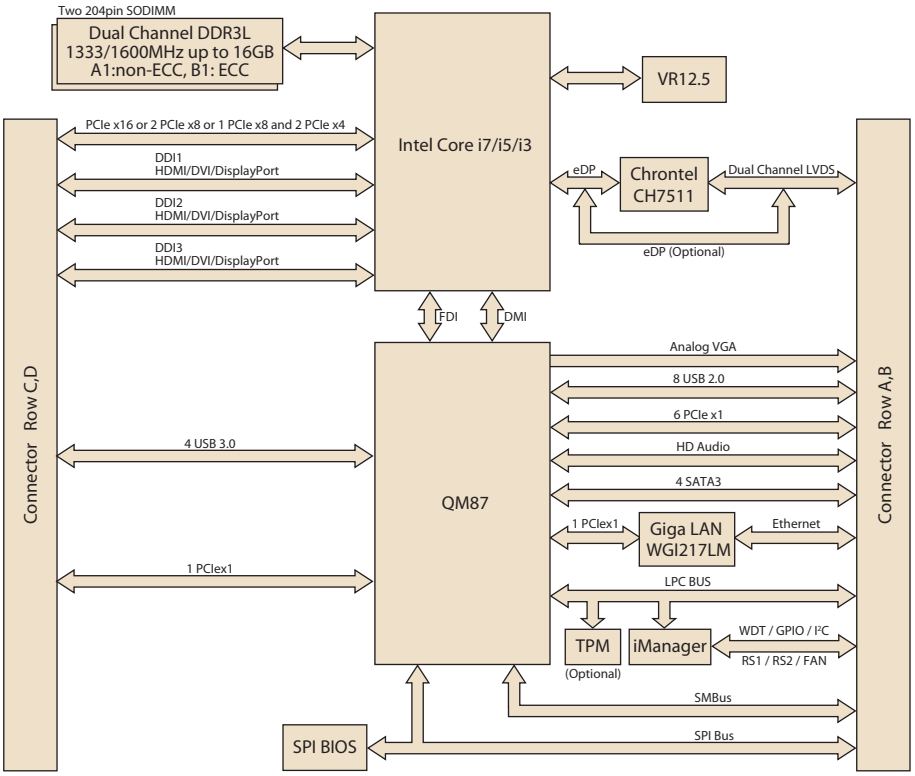


## Ordering Information

| Part No. | CPU | Frq. | CPU TDP | LLC | PCH | DDR3L Memory | LVDS | VGA | DDI | Giga LAN | HDA | PCIe x16 | PCIE x1 | USB2.0 | USB3.0 | SATA III | LPC | Power | Thermal Solution | Operating Temperature |
|---|---|---|---|---|---|---|---|---|---|---|---|---|---|---|---|---|---|---|---|---|
| SOM-5894C7-U4A1E | Core i7-4700EQ | 2.4 GHz | 47W | 6 MB | QM87 | non-ECC | 18/24-bit | Yes | 3 | 1 | Yes | 1 | 7 | 8 | 4 | 4 | Yes | AT/ATX | Active | 0 ~ 60° C |
| SOM-5894C5-U7A1E | Core i5-4400E | 2.7 GHz | 37W | 3 MB | QM87 | non-ECC | 18/24-bit | Yes | 3 | 1 | Yes | 1 | 7 | 8 | 4 | 4 | Yes | AT/ATX | Active | 0 ~ 60° C |
| SOM-5894C5-S6A1E | Core i5-4402E | 1.6 GHz | 25W | 3 MB | QM87 | non-ECC | 18/24-bit | Yes | 3 | 1 | Yes | 1 | 7 | 8 | 4 | 4 | Yes | AT/ATX | Active | 0 ~ 60° C |
| SOM-5894C3-U5A1E | Core i3-4100E | 2.4 GHz | 37W | 3 MB | QM87 | non-ECC | 18/24-bit | Yes | 3 | 1 | Yes | 1 | 7 | 8 | 4 | 4 | Yes | AT/ATX | Active | 0 ~ 60° C |
| SOM-5894C3-S7A1E | Core i3-4102E | 1.6 GHz | 25W | 3 MB | QM87 | non-ECC | 18/24-bit | Yes | 3 | 1 | Yes | 1 | 7 | 8 | 4 | 4 | Yes | AT/ATX | Active | 0 ~ 60° C |
| SOM-5894CR-U2A1E | Celeron 2000E | 2.2 GHz | 37W | 2MB | QM87 | non-ECC | 18/24-bit | Yes | 3 | 1 | Yes | 1 | 7 | 8 | 4 | 4 | Yes | AT/ATX | Active | 0 ~ 60° C |
| SOM-5894CR-S5A1E | Celeron 2002E | 1.5 GHz | 25W | 2 MB | QM87 | non-ECC | 18/24-bit | Yes | 3 | 1 | Yes | 1 | 7 | 8 | 4 | 4 | Yes | AT/ATX | Active | 0 ~ 60° C |
| SOM-5894C7-U4B1E | Core i7-4700EQ | 2.4 GHz | 47W | 6 MB | QM87 | ECC | 18/24-bit | Yes | 3 | 1 | Yes | 1 | 7 | 8 | 4 | 4 | Yes | AT/ATX | Active | 0 ~ 60° C |
| SOM-5894C5-S6B1E | Core i5-4402E | 1.6 GHz | 25W | 3 MB | QM87 | ECC | 18/24-bit | Yes | 3 | 1 | Yes | 1 | 7 | 8 | 4 | 4 | Yes | AT/ATX | Active | 0 ~ 60° C |
| SOM-5894C3-U5B1E | Core i3-4100E | 2.4 GHz | 37W | 3 MB | QM87 | ECC | 18/24-bit | Yes | 3 | 1 | Yes | 1 | 7 | 8 | 4 | 4 | Yes | AT/ATX | Active | 0 ~ 60° C |
| SOM-5894C5Z-S6A1E | Core i5-4402E | 1.6 GHz | 25W | 3 MB | QM87 | non-ECC | 18/24-bit | Yes | 3 | 1 | Yes | 1 | 7 | 8 | 4 | 4 | Yes | AT/ATX | Active | -20 ~ 80° C |
| SOM-5894C5Z2-S6A1E | Core i5-4402E | 1.6 GHz | 25W | 3 MB | QM87 | non-ECC | 18/24-bit | Yes | 3 | 1 | Yes | 1 | 7 | 8 | 4 | 4 | Yes | AT/ATX | Active | -40 ~ 85° C |
| SOM-5894C3Z-S7A1E | Core i3-4102E | 1.6 GHz | 25W | 3 MB | QM87 | non-ECC | 18/24-bit | Yes | 3 | 1 | Yes | 1 | 7 | 8 | 4 | 4 | Yes | AT/ATX | Active | -20 ~ 80° C |
| SOM-5894C3Z2-S7A1E | Core i3-4102E | 1.6 GHz | 25W | 3 MB | QM87 | non-ECC | 18/24-bit | Yes | 3 | 1 | Yes | 1 | 7 | 8 | 4 | 4 | Yes | AT/ATX | Active | -40 ~ 85° C |

Note: Passive = fanless; Active = with fan

## Development Board

| Part No. | Description |
|---|---|
| SOM-DB5800-00A2E | COM Express Development Board A2 Type 6 Pin-out |

## Packing List

| Part No. | Description | Quantity |
|---|---|---|
| - | SOM-5894 CPU Module | 1 |
| 1960058957N001 | Heatspreader | 1 |

## Optional Accessories

| Part No. | Description |
|---|---|
| 1960048820N001 | Semi-Cooler 125 x 95 x 33.5 mm with 12V Fan |
| 1960073942T001 | SOM-5894 Cooler with DHCS and 12V Fan, 125 x 95 x 28.3 mm |
| 96LEDK-I057VG50NA1 | 5.7" LED PANEL 500N 640 x 480(G) AM-640480G2TNQW-A0H |
| 96LEDK-A084SV45NB2 | 8.4" LED PANEL 450N 800 x 600(G) G084SN05 V9 |
| 96LEDK-C150XG40NG1 | 15" LED PANEL 400N 1024 x 768(G) G150XGE-L04 |
| 96LEDK-A170SX35NF1 | 17" LED PANEL 350N 1280 x 1024(G) G170EG01 V1 |

## Embedded OS

| OS | Part No. | Description |
|---|---|---|
| WES | 2070012239 | WES7 (include SUSIAccess) |
| WES | 2070012060 | WES8 (include SUSIAccess) |
| Linux | 2070012218 | Linux Ubuntu13.04 |
| Linux | 2070012792 | CentOS (bundle SUSIAccess) |