SOM-5883

Intel® 11th Gen Core Processors (Code Name: Tiger Lake-H) COM Express® Basic Type 6 Module

Preliminary

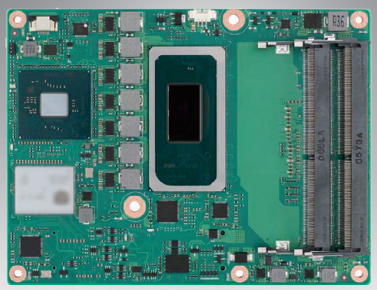

Features

- Intel® 11th Gen Core Processors, up to 8Core/16T, L3 Cache 24M
- Intel Iris Xe(Gen 12) graphics, 4 independent 4K display
- Dual channel DDR4 Max 128GB SODIMM, support ECC
- Super speed I/O: PCIe4 x16 (16GT/s), USB3.2 gen3 (10Gb), 2.5GbE, SATA3 (6Gb)
- TPM2.0 security protection, onboard NVMe SSD fast & anti-vibration
- Supports iManager, Edge-AI Suite, DeviceOn

Software APIs: Watchdog, I²C, SMBus, H/W Monitor, GPIO, Brightness

Windows Embedded iManager WISE-DeviceOn

Specifications

Form Factor	Form Factor	COM Express Compact Module							
	Pin-out Type	COM Express R3.0 Type 6 compatible							
Processor System	CPU	i7-11850HE	i5-11500HE	i3-11100HE	6600HE	W-11865MRE	W-11555MRE	W-11155MRE	W-11865MLE
	Base Frequency	2.6 GHz	2.6 GHz	2.4 GHz	2.6 GHz	2.6 GHz	2.6 GHz	2.4 GHz	1.5 GHz
	Max Single Core Turbo Frequency	4.7 GHz	4.5 GHz	4.4 GHz	-	4.7 GHz	4.5 GHz	4.4 GHz	4.5 GHz
	Cores	8	6	4	2	8	6	4	8
	LLC	24 MB	12 MB	8 MB	8 MB	24 MB	12 MB	8 MB	24 MB
	CPU TDP	45W/35W	45W/35W	45W/35W	35W	45W/35W	45W/35W	45W/35W	25W
	Chipset	QM580E	QM580E	QM580E	QM580E	RM590E	RM590E	RM590E	RM590E
	BIOS	AMI UEFI 256Mbit							
Memory	Technology	DDR4							
	Speed	3200	3200	3200	3200	3200	3200	3200	3200
	ECC Support	Non-ECC or ECC support by specific SKU							
	Max. Capacity	Max. 128GB							
	Socket	Maximum 4pcs 260P SO-DIMM (Dual Channel). 2pcs top side by default & 2pcs bottom side by option							
Graphics	Controller	Intel Iris Xe(Gen 12) graphics							
	Max. Frequency	1.35 GHz	1.35 GHz	1.25 GHz	1.1 GHz	1.35 GHz	1.35 GHz	1.25 GHz	1.35 GHz
	Graphic Memory	Shared memory							
	3D/HW Acceleration	JPEG, H264 (8 bits) and HEVC/H265 (10 bits)							
Display	VGA	1920 x 1200@60Hz							
	LCD	LVDS dual channel: 1920 x 1200@60Hz (optional eDP 4096 x 2304@60Hz, 24bpp)							
	DDI	"3 DDI ports support configurable HDMI/DVI/DisplayPort HDMI: 4096 x 2160@24Hz, DVI: 1920 x 1200@60Hz, DP: 4096 x 2304@60Hz"							
	Multiple Display	Quad Simultaneous Independent Display							
Expansion	PCI Express x16 (Gen4)	1 PCIe x16 configurable to 1 x16, 2 x8, 1 x8 + 2 x4							
	PCI Express x1 (Gen3)	8 PCIe x1, configurable to x4 or x2							
	Audio Interface	Intel HD Audio							
	LPC	Yes							
Serial Bus	SMBus	Yes							
	I2C Bus	Yes							
Ethernet	Gigabit	Intel I225LM/IT (up to 2.5GbE)							
I/O	SATA3.0	4 Ports (6 Gbps)							
	USB3.2 (Gen2)	4 Ports (10 Gbps)							
	USB2.0	8 Ports (480 Mbps)							
	SPI Bus	Yes. For BIOS EEPROM							
	GPIO	8-bit							
	Watchdog	65536 level, 0 ~ 65535 sec							
	COM Port	2 Ports (2-Wire)							
	TPM	TPM2.0							
	Smart Fan	2 Ports: 1 port on COM module (Notice: the input voltage of fan is aligned to Vin); 1 port on carrier board							
Power	Type	ATX: Vin, VSB; AT: Vin							
	Supply Voltage	Vin: 8.5V ~ 20V; VSB: 4.75V ~ 5.25 V, RTC Battery: 2.0V ~ 3.3V							
	Power Consumption (Max.)	68.38W @ 12V (i7-11850HE with 128GB DDR4 3200)							
	Power Consumption (Idle)	15.75W @ 12V (i7-11850HE with 128GB DDR4 3200)							
Environment	Operating Temperature	Operating Standard: 0 ~ 60° C (32 ~ 140° F), Extend: -40 ~ 85° C (-40 ~ 185° F) with 0.7m/s air flow. Storage: -40 ~ 85° C (-40 ~ 185° F)				Standard: 0 ~ 60 °C (32 ~ 140 °F) Extend: -40 ~ 85 °C (-40 ~ 185 °F)			
	Storage Temperature	-40 ~ 85 °C (-40 ~ 185 °F)							
	Humidity	Operating: 40 °C @ 95% relative humidity, non-condensing Storage: 60 °C @ 95%relative humidity, non-condensing							
	Vibration Resistance	3.5 Grms							
Mechanical	Dimensions	125 mm x 95 mm (4.92" x 3.74")							

研伟科技 15323776600

All product specifications are subject to change without notice.

Last updated: 17-May-2022

Block Diagram

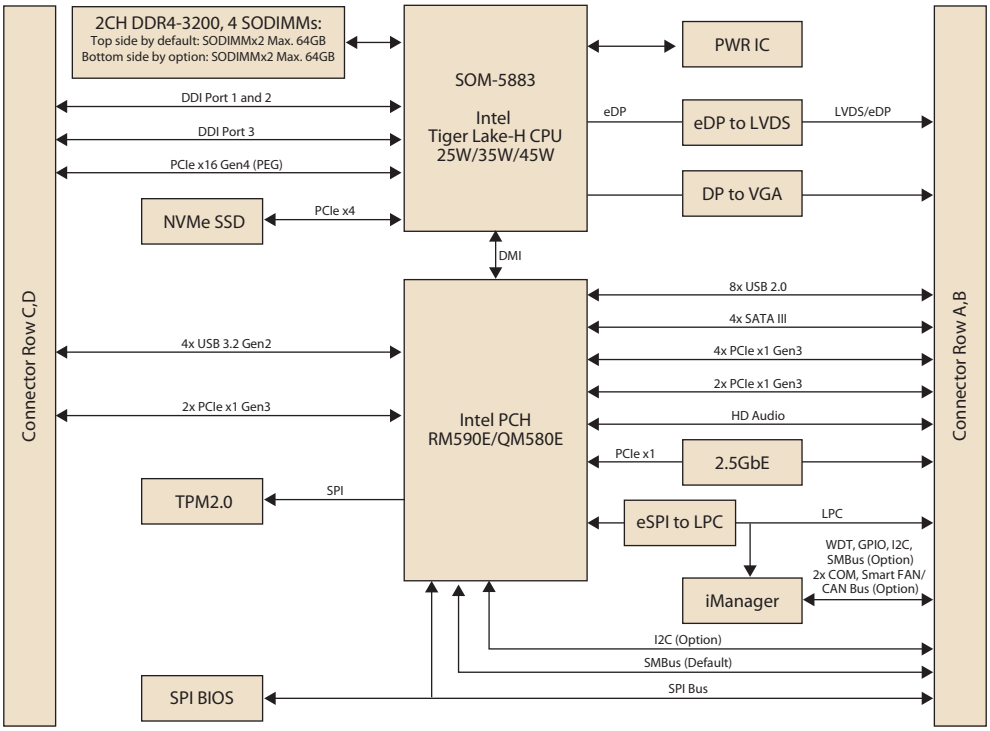

Ordering Information

Part No.	CPU	Core	Base Freq.	Max. Boost Freq.	CPU TDP	LLC	PCH	DDR4 SODIMM	SSD	USB4	Thermal solution	Operating Temp.
SOM-5883C7Q-U6A1	Core i7-11850HE	8	2.6GHz	4.7GHz	45W/35W	24MB	QM580E	non-ECC	N/A	N/A	Active	0 ~ 60 °C
SOM-5883C5Q-U6A1	Core i5-11500HE	6	2.6GHz	4.5GHz	45W/35W	12MB	QM580E	non-ECC	N/A	N/A	Active	0 ~ 60 °C
SOM-5883C3Q-U4A1	Core i3-11100HE	4	2.4GHz	4.4GHz	45W/35W	8MB	QM580E	non-ECC	N/A	N/A	Active	0 ~ 60 °C
SOM-5883C3QA-U4A1	Core i3-11100HE	4	2.4GHz	4.4GHz	45W/35W	8MB	QM580E	non-ECC	N/A	Option*	Active	0 ~ 60 °C
SOM-5883CRQ-U6A1	Celeron 6600HE	2	2.6GHz	N/A	35W	8MB	QM580E	non-ECC	N/A	N/A	Active	0 ~ 60 °C
SOM-5883D8R-U6A1	Xeon W-11865MRE (8C)	8	2.6GHz	4.7GHz	45W/35W	24MB	RM590E	ECC	N/A	N/A	Active	0 ~ 60 °C
SOM-5883D6R-U6A1	Xeon W-11555MRE (6C)	6	2.6GHz	4.5GHz	45W/35W	12MB	RM590E	ECC	N/A	N/A	Active	0 ~ 60 °C
SOM-5883D4R-U4A1	Xeon W-11155MRE (4C)	4	2.4GHz	4.4GHz	45W/35W	8MB	RM590E	ECC	N/A	N/A	Active	0 ~ 60 °C
SOM-5883D8RX-U6A1	Xeon W-11865MRE (8C)	8	2.6GHz	4.7GHz	45W/35W	24MB	RM590E	ECC	N/A	N/A	Active	-40 ~ 85 °C
SOM-5883D6RX-U6A1	Xeon W-11555MRE (6C)	6	2.6GHz	4.5GHz	45W/35W	12MB	RM590E	ECC	N/A	N/A	Active	-40 ~ 85 °C
SOM-5883D4RX-U4A1	Xeon W-11155MRE (4C)	4	2.4GHz	4.4GHz	45W/35W	8MB	RM590E	ECC	N/A	N/A	Active	-40 ~ 85 °C
SOM-5883D8RX-S5A1	Xeon W-11865MLE (8C)	8	1.5GHz	4.5GHz	25W	24MB	RM590E	ECC	N/A	N/A	Active	-40 ~ 85 °C

*SOM-MZ10 is not included in SOM-5883C3QA-U4A1, need to be purchased from optional accessories
Any other SKUs or combination is project based support. Please contact sales for details.
Memory sockets maximum 4pcs. 2pcs top side by default & 2pcs bottom side by option.

Development Board

Part No.	Description
SOM-DB5830-00A2	COMe Devel. Board COMe R3.0 Type6 pin-out (LVDS) 0 ~ 60 °C
SOM-DB5830A-00A2	COMe Devel. Board COMe R3.0 Type6 pin-out (eDP) 0 ~ 60 °C
SOM-DB5830X-00A2	COMe Devel. Board COMe R3.0 Type6 pin-out (LVDS) -40 ~ 85 °C

Packing List

Part No.	Description	Quantity
-	SOM-5883 COM module	1
1970005238T000	Heatspreader of SOM-5883	1

Optional Accessories

Part No.	Description
1970005036T001	Semi-Cooler 125 x 95 x 33.2 mm with 12V Fan
1970005367T001	QFCS 125x95x26.86 mm

Embedded OS

OS	Part No.	Description
Win10	20706WX9HS0143	img W10 19HL SOM-5883 64b 1809 ENU
Win10	20706WX9VS0147	img W10 19VL SOM-5883 64b 1809 ENU
Win10	20706WX9ES0158	img W10 19EL SOM-5883 64b 1809 ENU