SOM-5898

7th Gen Intel® Xeon® /Core™ Processors
COM Express Basic Module Type 6

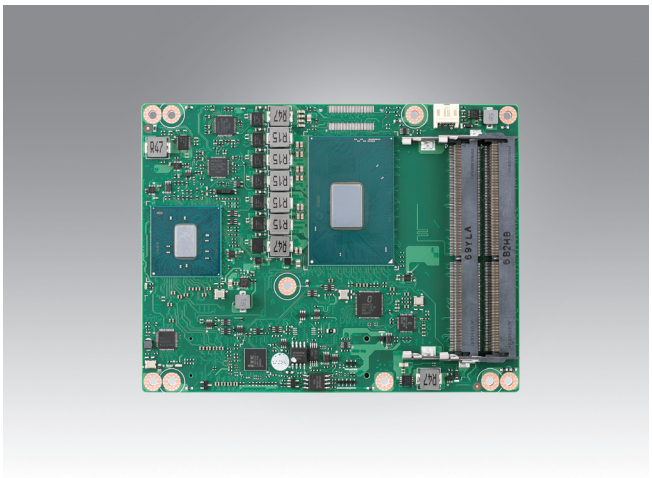

Features

- 7th Gen Intel Xeon® /Core™ Quad/Dual Cores + PCH QM175/CM238
- Dual channel DDR4 2400, Max 32GB (ECC optional)
- Support Three independent symmetrical displays (up to 4K)
- Flexible I/O support: Gen3 PEG and PCIe, USB3.0 and SATA3
- Supports iManager, WISE-PaaS/RMM and Embedded Software APIs

Software APIs: Watchdog, I²C, SMBus, H/W Monitor, GPIO, Brightness

Utilities: BIOS flash, Monitoring, Embedded Security ID

Windows Embedded iManager DeviceOn CE FC

Specifications

Compliance	Form-Factor	COM Express Basic Module						
	Pin-out Type	COM Express R2.1 Type 6 pin out						
Processor System	CPU	i7-7820EQ	i5-7440EQ	i5-7442EQ	i3-7100E	i3-7102E	E3-1505MV6	E3-1505LV6
	Base Frequency	3.0 GHz	2.9 GHz	2.1 GHz	2.9 GHz	2.1 GHz	3.0 GHz	2.2 GHz
	Max Single Core Turbo Frequency	3.7 GHz	3.6 GHz	2.9 GHz	-	-	4.0 GHz	3.0 GHz
	Cores	4	4	4	2	2	4	4
	Cache	8 MB	6 MB	6 MB	3 MB	3 MB	8 MB	8 MB
	CPU TDP	45W	45W	25W	35W	25W	45W	25W
	BIOS	AMI UEFI 128Mbit						
Memory	Technology	DDR4 up to 2400MHz						
	ECC Support	ECC is supported with specific SKU						
	Max. Capacity	Up to 32GB						
	Socket	Dual Channel 260P SO-DIMM (1 DIMM per Channel)						
Graphics	Controller	Intel Gen 9 low power graphics						
	Base/Turbo Freq.	350MHz/1GHz						
	Graphics Memory	Intel DMVT5.0, share memory up to 1024MB						
	3D/HW Acceleration	HW Codec: H.265/HEVC 8bit/10bit encode/decode ; VP8 8bit encode/decode, VP9 10bit decode ; MPEG2 ; JPEG ; VC1/WMV9. Direct3D 2015/11.2/11.1/10/9 ; OpenGL5.0 ; OpenCL 2.0/1.2/1.0						
Display	VGA	1 port up to 1920 x 1200 @ 60 Hz						
	LCD	LVDS Dual Channel 18/24-bit, up to 1920 x 1200 @ 60Hz						
	DDI	2 Port configurable to HDMI1.4/DVI/Displayport1.2 HDMI up to 4096 x 2160@30/24Hz, DVI up to 1920 x 1200@60Hz, DP up to 4096 x 2304 @ 60Hz						
	Multiple Display	Dual display, Triple display with each display combinations						
Expansion	PCI Express x16 (Gen3)	1 PCIe x16 configurable to 1 x16, 2 x8, 1 x8 + 2 x4						
	PCI Express x1 (Gen3)	8 PCIe x1, configurable to x4 or x2						
	Audio Interface	Intel HD Audio Interface						
	LPC	Yes						
Serial Bus	SMBus	Yes						
	I²C Bus	Yes						
Ethernet	Controller	Intel I219						
	Speed	10/100/1000 Mbps						
I/O	SATA (Gen 3)	4 Ports (6Gbps)						
	USB3.0	4 Ports (5Gbps)						
	USB2.0	8 Ports (480Mbps)						
	SPI Bus	Yes						
	GPIO	8-bit						
	Watchdog	65536 level, 0~65535 sec						
	COM Port	2 Ports (2-wire)						
	Express Card	2 Ports						
	TPM	TPM2.0 (Infineon SLB9665)						
	Smart Fan	2 Ports: 1 port on module (Notice: the input voltage of fan is aligned to Vin); 1 port on carrier board						
Power	Type	ATX: Vin, VSB; AT: Vin						
	Supply Voltage	Vin: 8.5V ~ 20V; VSB: 4.75V ~ 5.25 V, RTC Battery: 2.0V ~ 3.3V						
	Power Consumption	Max: 12V @ 48.1W, i7-7820EQ Idle: 12V @ 6.77W, i7-7820EQ *Only for reference and will depends on custom software loading, detail refer to user manual						
Environment	Operating Temperature	Standard: 0 ~ 60 °C (32 ~ 140 °F), Extend: -40 ~ 85 °C (-40 ~ 185 °F)						
	Storage Temperature	-40 ~ 85 °C (-40 ~ 185 °F)						
	Humidity	Operating: 40 °C @ 95% relative humidity, non-condensing Storage: 60 °C @ 95%relative humidity, non-condensing						
	Vibration Resistance	3.5 Grms						
Mechanical	Dimensions	125 mm x 95 mm (4.92" x 3.74")						

All product specifications are subject to change without notice.

Block Diagram

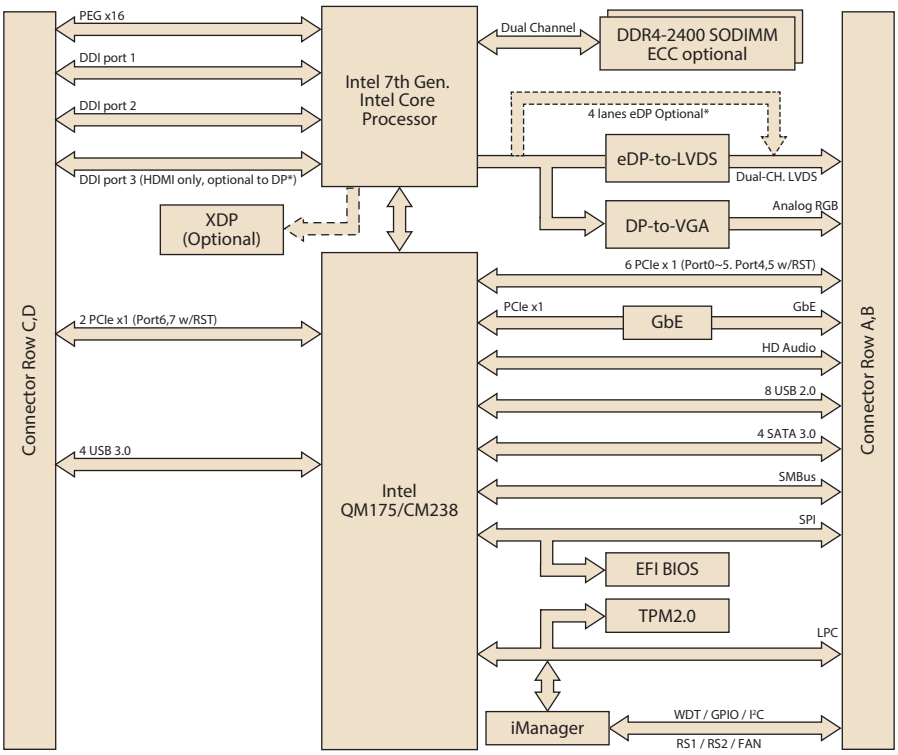

***Display Configuration Table**

Default	DDI1 (DP++)	DDI2 (DP++)	DDI3 (HDMI only)	LVDS	VGA
Optional	DDI1 (DP++)	DDI2 (DP++)	DDI3 (DP++)	eDP (4 lanes)	

Ordering Information

Part No.	CPU	Freq.	Cores	CPU TDP	PCH	DDR4 Memory	Thermal Solution	Operating Temperature
SOM-5898C7-H0A2	i7-7820EQ	3.0	4	45W	QM175	non-ECC	Active	0 ~ 60 °C
SOM-5898C5-U9A2	i5-7440EQ	2.9	4	45W	QM175	non-ECC	Active	0 ~ 60 °C
SOM-5898C3-U9A2	i3-7100E	2.9	2	35W	QM175	non-ECC	Active	0 ~ 60 °C
SOM-5898E4M-H0A2	E3-1505MV6	3.0	4	45W	CM238	ECC/ non-ECC	Active	0 ~ 60 °C
SOM-5898C5X-U9A2	i5-7440EQ	2.9	4	45W	QM175	non-ECC	Active	-40 ~ 85 °C
SOM-5898C5X-U1A2	i5-7442EQ	2.1	4	25W	QM175	non-ECC	Active	-40 ~ 85 °C
SOM-5898C3X-U1A2	i3-7102E	2.1	2	25W	QM175	non-ECC	Active	-40 ~ 85 °C
SOM-5898E4MX-H0A2	E3-1505MV6	3.0	4	45W	CM238	ECC/ non-ECC	Active	-40 ~ 85 °C
SOM-5898E4LX-U2A2	E3-1505LV6	2.2	4	25W	CM238	ECC/ non-ECC	Active	-40 ~ 85 °C

Any other SKU or combination is project based support. Please contact sales for details.

Development Board

Part No.	Description
SOM-DB5800-00A2E	COMe Devel. Board Type6 pint-out Rev. A2

Packing List

Part No.	Description	Quantity
-	SOM-5898 CPU module	1
1960081253T001	Heatspreader	1

Optional Accessories

Part No.	Description
1960048820N001	Semi-Cooler 125 x 95 x 33 mm with 12V FAN
1960094209T001	QFCS 125 x 95 x 26.29 mm

* Test conditions follow Advantech regulations and procedures.
* QFCS: Quadro Flow Cooling System

Embedded OS

OS	Part No.	Description
Win10 (HL)	2070015300	Img Win10 IoT Ent_LTSB 64 bit (Xeon & Core i7)
Win10 (VL)	2070015301	Img Win10 IoT Ent_LTSB 64 bit (Core i5 & i3)