SOM-5893

Second generation AMD embedded R-Series APU COM Express® Basic Module

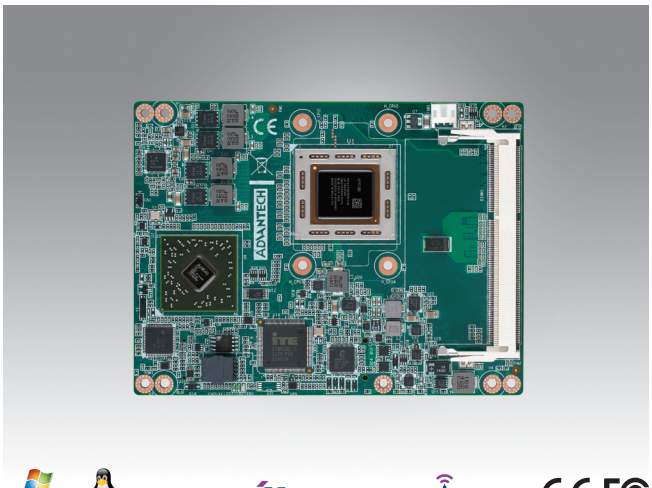

Windows Embedded

iManager SUSIAccess CE FC

Features

- AMD R-Series APU Bald Eagle + A77E
- Dual DDR3L-1600 SODIMM sockets up to 16 GB
- Four Independent Displays with outstanding graphics performance
- Plenty high speed interface, PCIe x16 Gen3, SATA Gen3, USB3.0
- Supports iManager, SUSIAccess and Embedded Software APIs

Software APIs: Watchdog, I²C, SMBus, H/W Monitor, GPIO, Brightness

Utilities: BIOS flash, Monitoring, Embedded Security ID

Specifications

Form Factor	Form Factor	COM Express Basic Module		
	Pin-out Type	COM Express R2.1 Type 6		
Processor System	CPU	RX-427BB	RX-425BB	RX-225FB
	Base Frequency	2.7GHz	2.5GHz	2.2GHz
	Max Single Core Turbo Frequency	3.6GHz	3.4GHz	3.0GHz
	Core	Quad Core	Quad Core	Dual Core
	LLC	4MB	4MB	1MB
	CPU TDP	35W	35W	17W
	Chipset	A77E		
	BIOS	AMI UEFI 64Mbit		
Memory	Technology	DDR3L 1600MHz	DDR3L 1600MHz	DDR3L 1600MHz
	ECC Support	non-ECC		
	Max. Capacity	Up to 16GB		
	Socket	Dual Channel 204P SODIMM		
Graphics	Controller	AMD Radeon HD9000 GPU		
	Max. Frequency	686MHz	654MHz	533MHz
	Graphic Memory	Up to 1GB frame buffer		
	3D/HW Acceleration	DX11, OpenGL 4.2, OpenCL 1.2 UVD4.2 (H.264, MPEG-2, VC-1, MPEG-4 (DivX®), and WMV) Decode VCE2.0 (Videoconferencing, wireless displayy technology1. H.264, SVC) Encode		
Display	VGA	Up to 1920 x 1200		
	LCD	Single and dual channel 18/24-bit LVDS, up to 1920 x 1200		
	DDI	2 DDI ports support configurable HDMI/DVI/DP, up to 4096x2160. Up to 3 ports configured via PCIe x16		
	Multiple Display	Up to Quad Displays. Support any combinations of VGA, LVDS and DDI (HDMI with audio only support 1 port)		
Expansion	PCI Express x16	1 Port Quad Core support PCI Express x16 Gen3 (8.0GT/s) Dual Core support PCI Express x8 Gen2 (5.0GT/s)		
	PCI Express x1	7 Ports support PCI Express Gen 2 (5.0 GT/s), support x4 and x2 configurations Up to 8 Ports when remove LAN		
	Audio Interface	HD Audio		
	LPC	Yes		
Serial Bus	SMBus	Yes		
	I²C Bus	Support 100Kb/s and 400Kb/s devices. Both master by default, and slave modes are supported optionally		
Ethernet	Controller	Intel® i211AT		
	Speed	10/100/1000 Mbps		
I/O	SATA	4 ports support SATA III 6.0Gb/s		
	USB3.0	4 Ports		
	USB2.0	8 Ports		
	Audio	HD Audio		
	SPI Bus	Yes		
	GPIO	8-bit GPIO		
	SD (option)	SDHC Class 10, capacity range 4 to 32 GB, 1 and 4-bit modes		
	Watchdog	65536 level, 0 ~ 65535 sec		
	COM Port	2 Ports (2-Wire)		
	Express Card	2 Ports		
	TPM	TPM1.2 (Optional)		
	Smart Fan	2 Ports; 1 Port on COM Module. Support 12V Fan, 1 Port on Carrier Board		
Power	Type	ATX: Vin, VSB, AT: Vin		
	Supply Voltage	Vin: 8.5 (9-5%) ~ 20V (18+10%), VSB: 5V±5%, RTC Battery: 2.0-3.3V		
	Power Consumption (Max.)	Max 7.1A ; RMS 3.3A		
	Power Consumption (Idle)	1.4A		
Environment	Temperature	Operating: 0 ~ 60° C (32 ~ 140° F), Storage: -40 ~ 85° C (-40 ~ 185° F)		
	Humidity	Operating: 40° C @ 95% relative humidity, non-condensing Storage: 60° C @ 95%relative humidity, non-condensing		
Mechanical	Dimensions	125 x 95 mm (4.92" x 3.74")		

All product specifications are subject to change without notice

Block Diagram

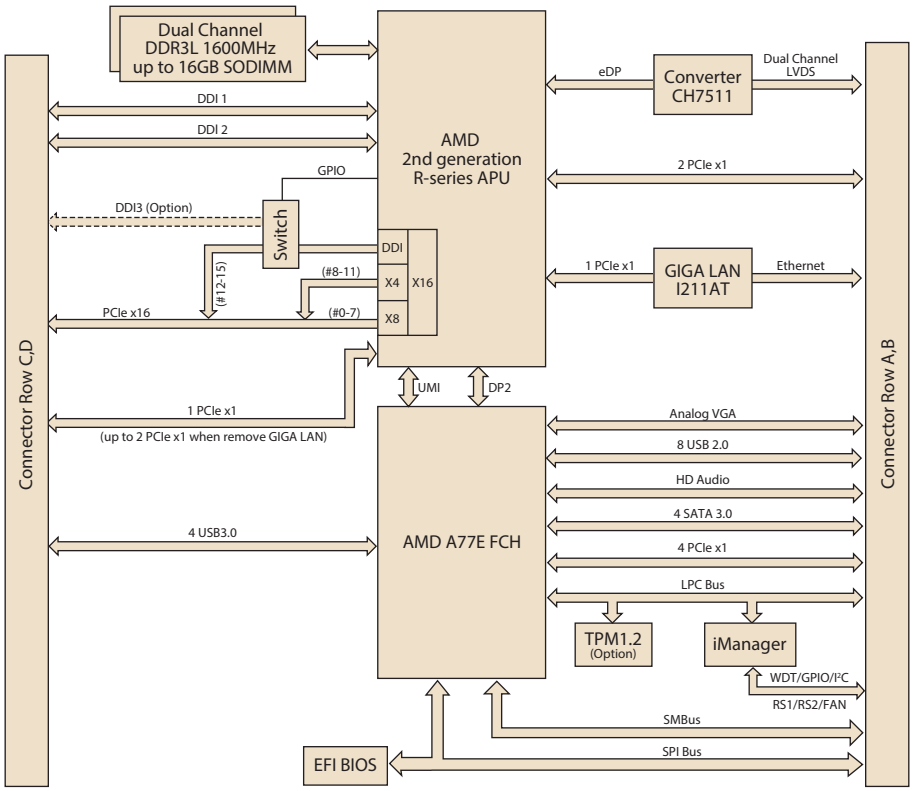

Ordering Information

Part No.	CPU	Freq.	CPU TDP	LLC	PCH	DDR3 SODIMM	LVDS	VGA	DDI	Giga LAN	HD A	PEG x16	PCIe x1	USB 2.0	USB 3.0	SATA III	LPC	Power	Thermal solution	Operating Temp.
SOM-5893RG-U7A1E	RX-427BB	2.7 GHz	35W	4	A77E	non-ECC	18/24 bit	Yes	3	1	Yes	1	7	8	4	4	Yes	AT/ATX	Active	0 ~6 0° C
SOM-5893RG-U5A1E	RX-425BB	2.5 GHz	35W	4	A77E	non-ECC	18/24 bit	Yes	3	1	Yes	1	7	8	4	4	Yes	AT/ATX	Active	0 ~6 0° C
SOM-5893RG-U2A1E	RX-225FB	2.2 GHz	17W	1	A77E	non-ECC	18/24 bit	Yes	3	1	Yes	1*	7	8	4	4	Yes	AT/ATX	Active	0 ~6 0° C

* up to PCIe x8

Development Board

Part No.	Description
SOM-DB5800-00A2E	COM Express Development Board A2 Type 6 Pin-out

Packing List

Part No.	Description	Quantity
-	SOM-5893 CPU Module	1
1960069427N001	Heatspreader	1

Optional Accessories

Part No.	Description
1960048820N001	Semi-Cooler 125x95x33.5mm with 12V Fan
96LEDK-I057VG50NA1	5.7" LED PANEL 500N 640 x 480(G) AM-640480G2TNQW-A0H
96LEDK-C150XG40NG1	15" LED PANEL 400N 1024 x 768(G) G150XGE-L04
96LEDK-A170SX35NF1	17" LED PANEL 350N 1280 x 1024(G) G170EG01 V1

Embedded OS

OS	Part No.	Description
WES7E	2070013322	img WES7E SOM-5893 x64 v5.6.8 ENG; SAP
WE8S	2070013318	img WE8S SOM-5893 x64 v6.5.2 ENG