UTC-120

21.5" Ubiquitous Touch Computer
UTC-120H with Intel® Core™ i5-8365UE

Features

- Slimmer and Lighter design
- Low power and fanless system design
- Built-in Intel® Core™ i5-8365UE
- 21.5" monitor with 16:9 widescreen display
- IP65-rated front panel for water and dust resistance
- Clean back cover design with 3 Way IO cable routing
- Supports both landscape and portrait screen orientations
- VESA 100 mm standard mounting holes for varied mounting demands
- Support DeviceOn/iService software for remote device management

Introduction

UTC-120 features an all-in-one computing system which equipped with wide format, touch based LCD panel. It is easy to integrate key peripherals and display systems for diversified self-service and interactive signage deploy in different application areas.

Thanks for the slim and light looking with 3 way cable routing design, makes UTC-120 good fit to diverse scenarios and areas.

The systems deliver updated information with well-designed interactive interfaces, with fully ensure relevant content and targeted promotions are delivered. UTC series touch panel computers are the best investments to enhance user satisfaction, further brand equity, and maximize business profits.

Moreover, Advantech DeviceOn/iService Software is a next-generation unified device management unified device management solution based on the WISE-DeviceOn platform. With support for batch operations and multi-device control, DeviceOn/iService enables easy device configuration and deployment for convenient remote device management.

Specifications

Process system	CPU	Intel® Core™ i5-8365UE (UTC-120H) (Intel Vpro support)
	Base Frequency	1.10 GHz (Quad-Core)
	Memory	1 x 260 pin SO-DIMM DDR4 2400 MT/s up to 16GB
	Storage	M.2 2242/2280 SSD
	Network	2 x Gigabit Ethernet ports
	I/O Ports	2 x RS-232 COM (COM2 RS-232/422/485) 4 x USB3.0 2 x Gigabit Ethernet ports 1 x HDMI 1.4 1 x Audio Phone Jack
	Stereo Speaker	2 x 2W
	Bus expansion	1 x M.2 key2230, 1 x M.2 key2242
	Mounting	VESA 100 x 100 mm (Screw Size, M4, 7mm)
	Dimension (WxHxD)	523.9 x 315.4 x 39.5
	Weight	5.29kg
OS Support		Win 10 IoT Enterprise 64bit Linux
Environment Specification	Operating temperature	0 ~ 35 °C (32 ~ 95 °F)*
	Relative Humidity	10 ~ 95% @ 40 °C non-condensing
	Vibration	0.5G
	Shock	Shock 10G peak acceleration(11 msec. duration)
	Certification	CE, FCC, CB, UL, CCC, BSMI
	Front Panel Protection	IP 65 Compliant
Power Supply	DC Input Rating	12V/7A (84W ITE Adapter)
	PoE	n/a
	Power consumption	60W
LCD Display	Size/Type	21.5" FHD
	Max.Resolution	1920 x 1080
	Max. Color	16.7M
	Pixel Pitch (um)	248.25(H) x 248.25(V)
	Brightness (cd/m²)	250/400
	View Angle	178° /178°
Touch Screen Option	Type	Projected Capacitive.
	Light Transmission	> 85%
	Controller	USB Interface
TPM		TPM 2.0

昊生 研 15323776600

All product specifications are subject to change without notice, * identify as optional function

Last updated: 26-Jan-2022

Specifications (Cont.)

DeviceOn/iService Remote Device Management	Operating System	Windows 10
	Common Controls (Reboot, Shutdown)	✓
	Remote desktop	✓(VNC)
	Device-Specific Controls (Audio)	✓*
	Connection Status	✓
	Hardware Status	✓*
	Hard Disk Status	✓*
	Batch Operation Support	✓
	OTA Storage Management	FTP
	OTA Software Updates	✓
	Software Watchlist	✓
	Software Start/Stop	✓*
	Kiosk Mode	
*Dependent on device model	Peripherals Watchlist	✓*

Note: DeviceOn/iService software must be downloaded from the Advantech website at https://www.advantech.com/search/?q=DeviceOn%2FiService&st=support&sst=Utility

昊宇研伟科技 15323776600

Dimensions

Unit: mm

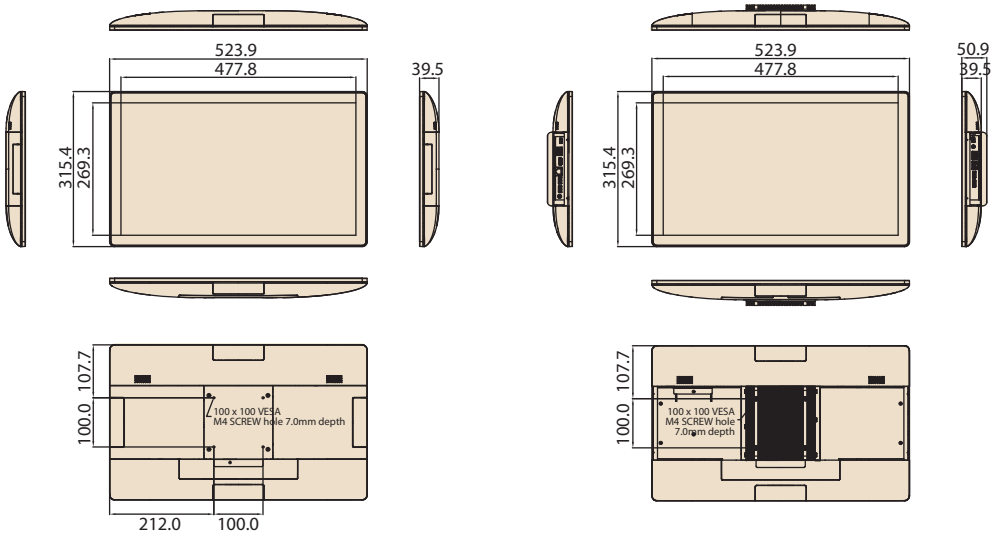

Fully- Integrated I/O

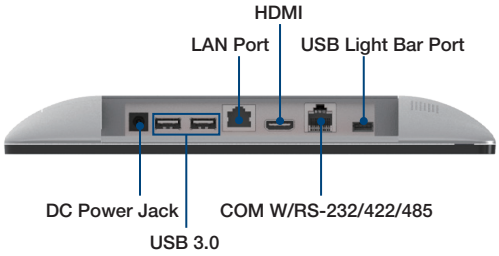

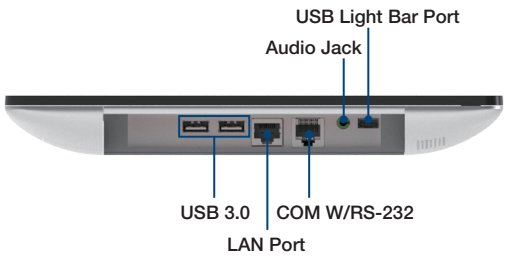

Ordering Information

For Worldwide Model

Part No.	Descriptions
UTC-120HP-NWW0E	21.5" FHD, Pcap, i5-8365UE, 4G RAM, 128G SSD, Silver
UTC-120HP-WWW1E	21.5" FHD, Pcap, i5-8365UE, 4G RAM, 128G SSD, Win10, Wifi/BT, Silver

For US only Model

Part No.	Descriptions
UTC-120HP-WUS1E	21.5" FHD, Pcap, i5-8365UE, 8G RAM, 128G SSD, Win10, Wifi/BT, Power cord, Silver
UTC-120HP-NUS1E	21.5" FHD, Pcap, i5-8365UE, 8G RAM, 128G SSD, Wifi/BT, Power cord, Silver

For China Only Model

Part No.	Descriptions
UTC-120HP-NCN1E	21.5" Pcap,FHD,i3-8145UE,4G RAM,128G SSD,Wifi

For EU only Model

Part No.	Descriptions
UTC-120HP-WEU1E	21.5" FHD, Pcap, i5-8365, 8G RAM, 128G SSD, WIN10, Wifi/BT, Silver, Power Cord
UTC-120HP-WEF1E	21.5" Pcap, FHD, i3-8145UE, 8G RAM, 128G SSD, Wifi, Win10, Power Cord

Extra ordering information

Part No.	Descriptions
1702002605	Power cord 2P FRANCE 10A/16A 220V 1.83M 90D
1702002600	Power Cord 3P UL/CSA(USA) 125V 10A 1.83M 180D
1700000596-11	Power Cord (China) CCC,10A 250V, 3P 1830mm
1700018704	Power Cord UK BSI 2P 10A 250V 180cm 18AWG
1700025928-02	COM Port Converter cable RJ48-10P10C to D-SUB 9P 35cm
UTC-T01-STANDE	Tri Shape Floor Stand 120cm
UTC-100P-STAND0E	L Stand
UTC-300P-D20E	Desk Stand, Silver, for UTC-115/120
UTC-AVALO-STAND0E	Avalo Stand
ASK-TBSD-BS1510A01	Table Stand for UTC-115 (Black)
UTC-S01-STAND	Table Stand for UTC-120 (Black)
ASK-TBSD-BS2710A01	Tilt Table Stand for UTC-100 Serires (Black)
UTC-WALL-MOUNT1E	Adjustable VESA Wall-Mount for UTC-100 Series
UTC-WALL-MOUNT3E	Vesa Wall-mount for UTC-100 Series (Black)

昊宇 工控科技 15323776600

Peripheral Mountable on All 4 Sides

Peripherals for UTC-100(AIO system) series

Part No.	Description
UTC-100P-B11E	2D Barcode Scanner for UTC-115/120
UTC-100P-C10E	5M Camera for UTC-115/120
UTC-100P-R10E	RFID Scanner for UTC-115/120
UTC-100P-M10E	MSR Reader for UTC-115/120
UTC-100P-S10E	Smart Card Reader for UTC-115/120
UTC-100P-L10E	LED Light Bar for UTC-115/120
UTC-100P-F10E	Finger Print Reader for UTC-115/120
UTC-100P-T10E	Thermal Camera for UTC-115/120

DeviceOn / iService

Unified Remote Device Management Software

Features

- Supports Advantech devices equipped with Windows, Android, and Linux OS
- Flexible device, location, user, and permissions management
- Enables remote monitoring and control of hardware, software, and peripherals
- Supports over-the-air (OTA) firmware and software updates
- Ensures quick, easy, and secure device onboarding
- RESTful APIs for third-party system integration

Introduction

Advantech's DeviceOn/iService is a next-generation unified device management solution based on the WISE-DeviceOn platform. Designed to enable centralized monitoring and remote management, DeviceOn/iService supports Advantech devices equipped with Windows, Linux, or Android operating systems. The software also supports the management of applications and integrated peripherals, such as a barcode scanner, card reader, camera, and printer. Users can remotely access and control connected devices, take screenshots, rollout OTA upgrades, and use remote desktop capabilities for troubleshooting from any location at any time. Moreover, DeviceOn/iService supports batch operations to facilitate the management of multiple devices simultaneously for easy and convenient device configuration and deployment.

Total Management

Devices & Hardware
- Windows, Linux, Android
- Hardware, storage, battery

Software & Peripherals
- Software monitoring & access
- Screens, USB devices, printers

Open for Expansion
- Peripheral integration
- Open APIs for integration

Remote Access

Real-Time Monitoring
- Connection/hardware status
- Software/peripheral status
- Failure notifications

Remote Controls
- Power controls
- Audio, backlight controls
- Software controls

Troubleshooting
- Screenshots
- Remote desktop support

Operational Efficiency

OTA updates
- System/software updates
- File repository management
- App store

Batch Controls
- 1-to-many batch reboot, etc.
- Time-saving tasks

Setup Booster
- Software/peripheral watchlist
- Roles, rule templates

Note: Some functions may vary according to the product
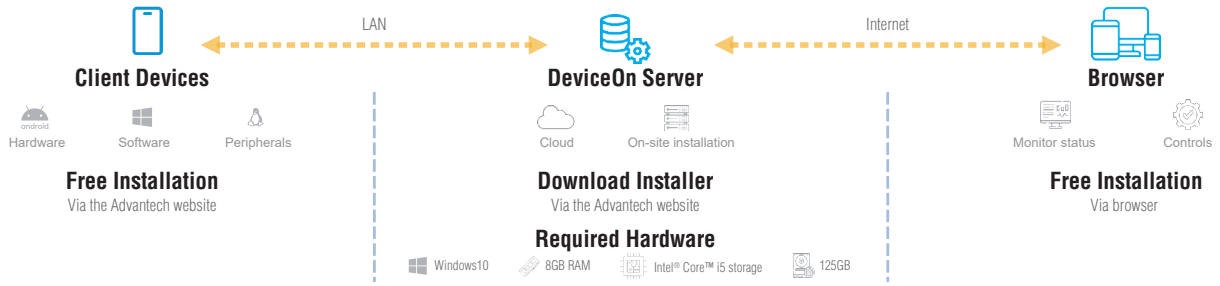
System Architecture