# UTK-7121

## 21.5" Slim Tabletop Kiosk
## Intel® Core™ i5-8365UE
## Intel® Pentium® N4200

## Features

- Low power consumption and fanless design
- Built-in Intel® Core™ i5-8365UE processor
- Built-in Intel® Pentium® N4200 processor
- 21.5" monitor with 16:9 widescreen display
- IP65-rated front panel for water and dust resistance
- Rich I/O and diverse peripheral options
- Plastic enclosure with side groove design for flexible peripheral installation
- Support Windows, Android, and Linux operating systems
- Floor stand tower available
- Support DeviceOn/iService software for remote device management

CE FCC

## Introduction

Advantech's UTK-7121 is a smart, modular kiosk system you build with an Advantech's UTC-100 series touch computer, diverse components, and various types of stands to meet every unique need. Powered by a sixth-generation Intel® processor and equipped with up to 16GB of memory, the UTK-7121 series deliver excellent performance to support various self-service applications. Designed to meet diverse needs and requirements of self-service applications, Advantech UTK-7121 series offer flexible configuration and installation options, making it the perfect kiosk for businesses that require tailored solutions.

Moreover, Advantech DeviceOn/iService Software is a next-generation unified device management unified device management solution based on the WISE-DeviceOn platform. With support for batch operations and multi-device control, DeviceOn/iService enables easy device configuration and deployment for convenient remote device management.

## Specifications

| | | UTK-7121-G | UTK-7121-H |
|---|---|---|---|
| Process system | CPU | Intel® Pentium® N4200 (UTC-120G) | Intel® Core™ i5-8365UE (UTC-120H) |
| | Base/Burst Frequency | 1.10Ghz/2.50Ghz (Quad-Core) | 1.10 GHz (Quad-Core) |
| | Memory | 1 x 204 pin SO-DIMM DDR3L 1600 MHz up to 8 GB | 1 x 260 pin SO-DIMM DDR4 2400 MT/s up to 16GB |
| | Storage | 1 x M.2 2242 SSD / 1 x 2.5 internal SATA storage | M.2 2242/2280 SSD |
| | Network | 2 x Gigabit Ethernet ports | 2 x Gigabit Ethernet ports |
| | I/O Ports | 2 x RS-232 COM (COM2 RS-232/422/485)<br>4 x USB3.0 / 2 x USB3.0 (optional)<br>2 x Gigabit Ethernet ports<br>1 x HDMI 1.4<br>1 x Audio Phone Jack | 2 x RS-232 COM (COM2 RS-232/422/485)<br>4 x USB3.0<br>2 x Gigabit Ethernet ports<br>1 x HDMI 1.4<br>1 x Audio Phone Jack |
| | Stereo Speaker | 2 x 2W | 2 x 2W |
| | Bus expansion | 1 x M.2 key2230, 1 x M.2 key2242 | 1 x M.2 key2230, 1 x M.2 key2242 |
| | Mounting | VESA 100 x 100 mm (Screw Size, M4, 7mm) | VESA 100 x 100 mm (Screw Size, M4, 7mm) |
| | Dimension (WxHxD) | 523.9 x 315.4 x 39.5 | 523.9 x 315.4 x 39.5 |
| | Weight | 5.29Kg | 5.29kg |
| OS Support | | Win 10 IoT Enterprise 64bit<br>Android 10.1<br>Linux Ubuntu 20.04 | Win 10 IoT Enterprise 64bit<br>Linux Ubuntu 18.04 |
| Environment Specification | Operating temperature | 0 ~ 40 °C (32 ~ 104 °F)* | 0 ~ 35 °C (32 ~ 95 °F)* |
| | Relative Humidity | 10 ~ 95% @ 40 °C non-condensing | 10 ~ 95% @ 40 °C non-condensing |
| | Vibration | 0.5G | 0.5G |
| | Shock | 10G peak acceleration (11 msec. duration) | Shock 10G peak acceleration(11 msec. duration) |
| | Certification | CE, FCC, CB, UL, CCC, BSMI | CE, FCC, CB, UL, CCC, BSMI |
| | Front Panel Protection | IP 65 Compliant | IP 65 Compliant |
| Power Supply | DC Input Rating | 12V/5A~24V/2.5A, 60W ITE Adapter | 12V/7A (84W ITE Adapter) |
| | PoE | IEEE 802.3at/30W (Optional) | n/a |
| | Power consumption | 26W | 45W |
| LCD Display | Size/Type | 21.5" FHD | 21.5" FHD |
| | Max.Resolution | 1920 x 1080 | 1920 x 1080 |
| | Max. Color | 16.7M | 16.7M |
| | Pixel Pitch (um) | 248.25(H) x 248.25(V) | 248.25(H) x 248.25(V) |
| | Brightness (cd/m2) | 250/400 | 250/400 |
| | View Angle | 178°/178° | 178°/178° |
| Touch Screen Option | Type | Projected Capacitive. | Projected Capacitive. |
| | Light Transmission | > 85% | > 85% |
| | Controller | USB Interface | USB Interface |



All product specifications are subject to change without notice.

## Specifications (Cont.)

| | | |
|---|---|---|
| DeviceOn/iService Remote Device Management | Operating System | Windows 10 |
| | Common Controls (Reboot, Shutdown) | ✓ |
| | Remote desktop | ✓(VNC) |
| | Device-Specific Controls (Audio) | ✓* |
| | Connection Status | ✓ |
| | Hardware Status | ✓* |
| | Hard Disk Status | ✓* |
| | Batch Operation Support | ✓ |
| | OTA Storage Management | FTP |
| | OTA Software Updates | ✓ |
| | Software Watchlist | ✓ |
| | Software Start/Stop | ✓* |
| | Kiosk Mode | |
| *Dependent on device model | Peripherals Watchlist | ✓* |

Note: DeviceOn/iService software must be downloaded from the Advantech website at https://www.advantech.com/search/?q=DeviceOn%2FiService&st=support&sst=Utility

## Dimensions

Unit: mm

**UTC-120G** **UTC-120H**

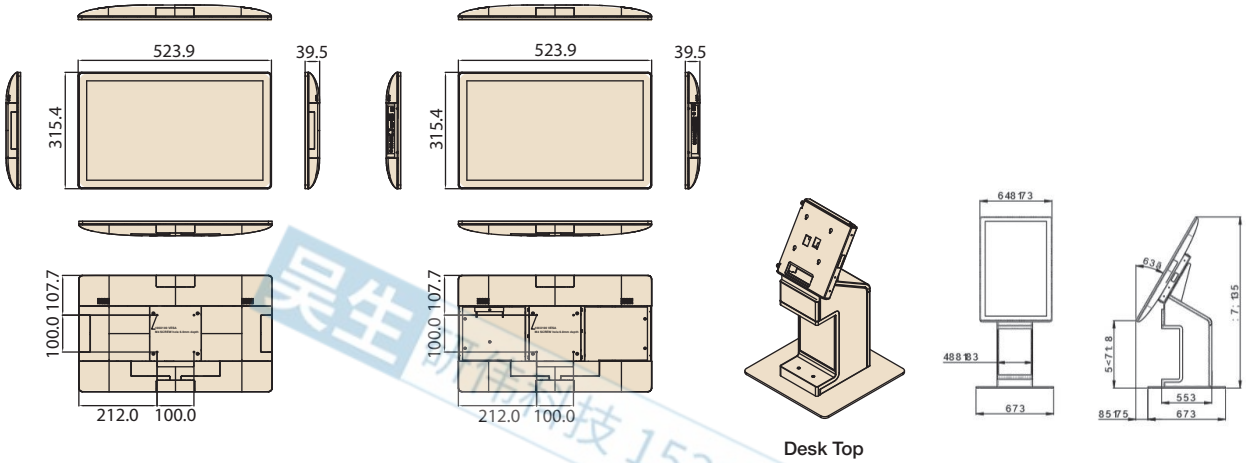


## Desk top ordering information

| Item | Part Number | Description |
|---|---|---|
| UTC-120G | UTC-120GP-NWW0E | 21.5"Pcap w/ Pentium N4200, 4G RAM, 128G TLC |
| UTC-120G | UTC-120GP-WWW1E | 21.5"Pcap w/ Pentium N4200, 4G RAM, 128G TLC, Wifi, Win 10 LTSC |
| UTC-120G | UTC-120GP-AWW1E | 21.5"Pcap w/ Pentium N4200, 4G RAM, 128G TLC, Wifi, Android |
| UTC-120G | UTC-120GP-WUS1E | FHD, N4200, 4G, 128G, Win10, Wifi, PWC |
| UTC-120G | UTC-120GP-NUS1E | FHD, N4200, 4G, 128G, Wifi, PWC |
| UTC-120G | UTC-120GP-WCN1E | FHD, N4200, 4G, 128G, Wifi |
| UTC-120G | UTC-120GP-NCN0E | FHD, N4200, 4G, 128G |
| UTC-120H | UTC-120HP-NWW0E | 21.5" FHD, Pcap, i5-8365, 4G RAM, 128G SSD, Silver |
| UTC-120H | UTC-120HP-WWW1E | 21.5" FHD, Pcap, i5-8365, 4G RAM, 128G SSD, Win10, Wifi/BT, Silver |
| UTC-120H | UTC-120HP-WUS1E | 21.5" FHD, Pcap, i5-8365, 8G RAM, 128G SSD, Win10, Wifi/BT, Power cord, Silver |
| UTC-120H | UTC-120HP-NUS1E | 21.5" FHD, Pcap, i5-8365, 8G RAM, 128G SSD, Wifi/BT, Power cord, Silver |
| UTC-120H | UTC-120HP-WEU1E | 21.5" Pcap,FHD,8365UE,8G RAM,128G SSD,Win10,WF,S |
| UTC-120H | UTC-120HP-WEF1E | 21.5" Pcap,FHD,i3-8145UE,8G RAM,128G SSD,Wifi, Win10 |
| UTC-120H | UTC-120HP-NCN1E | 21.5" Pcap,FHD,i3-8145UE,4G RAM,128G SSD,WF |
| Desktop stand | 96PD-00824 | Desktop stand for UTK-700 (Epson TM-T88V printer bracket included) |

昊生 科技 15323776600

## Dimensions

Unit: mm

**UTC-120G** **UTC-120H**

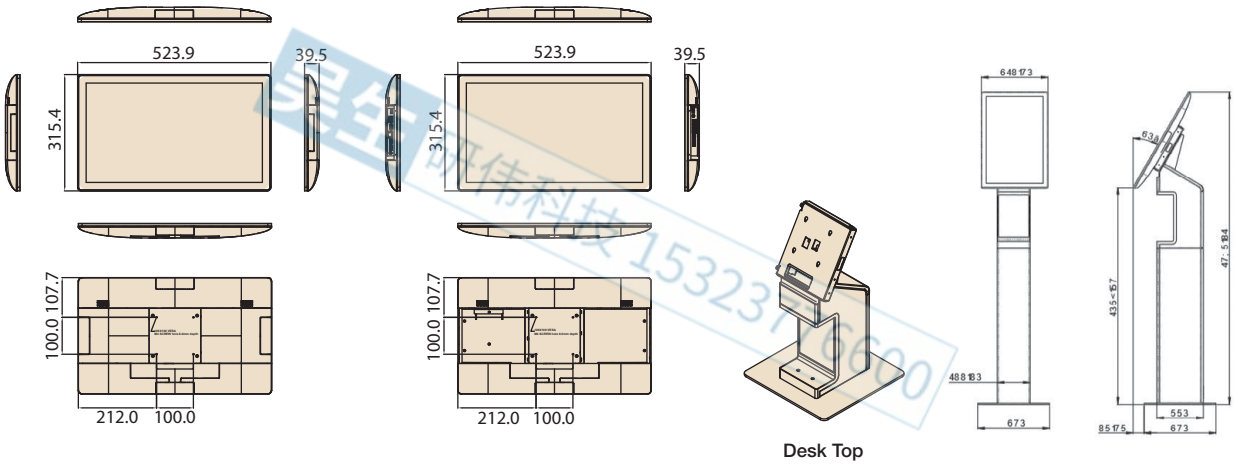


## Floor stand ordering information

| Item | Part Number | Description |
|---|---|---|
| Desktop stand | 96PD-00824 | Desktop stand for UTK-700 (Epson TM-T88V printer bracket included) |
| Floor Stand | 96PD-00825 | Extension stand for UTK-700 |

Peripheral Mountable on All 4 Sides

### Peripherals for UTC-100(AIO system) series

| Part No. | Description |
|---|---|
| UTC-100P-B11E | 2D Barcode Scanner for UTC-115/120 |
| UTC-100P-C10E | 5M Camera for UTC-115/120 |
| UTC-100P-R10E | RFID Scanner for UTC-115/120 |
| UTC-100P-M10E | MSR Reader for UTC-115/120 |
| UTC-100P-S10E | Smart Card Reader for UTC-115/120 |
| UTC-100P-L10E | LED Light Bar for UTC-115/120 |
| UTC-100P-F10E | Finger Print Reader for UTC-115/120 |
| UTC-100P-T10E | Thermal Camera for UTC-115/120 |

昊生 研伟科技 15323776600

# DeviceOn / iService

## Unified Remote Device Management Software

## Features

- Supports Advantech devices equipped with Windows, Android, and Linux OS
- Flexible device, location, user, and permissions management
- Enables remote monitoring and control of hardware, software, and peripherals
- Supports over-the-air (OTA) firmware and software updates
- Ensures quick, easy, and secure device onboarding
- RESTful APIs for third-party system integration

## Introduction

Advantech's DeviceOn/iService is a next-generation unified device management solution based on the WISE-DeviceOn platform. Designed to enable centralized monitoring and remote management, DeviceOn/iService supports Advantech devices equipped with Windows, Linux, or Android operating systems. The software also supports the management of applications and integrated peripherals, such as a barcode scanner, card reader, camera, and printer. Users can remotely access and control connected devices, take screenshots, rollout OTA upgrades, and use remote desktop capabilities for troubleshooting from any location at any time. Moreover, DeviceOn/iService supports batch operations to facilitate the management of multiple devices simultaneously for easy and convenient device configuration and deployment.

## Total Management

### Devices & Hardware
- Windows, Linux, Android
- Hardware, storage, battery

### Software & Peripherals
- Software monitoring & access
- Screens, USB devices, printers

### Open for Expansion
- Peripheral integration
- Open APIs for integration

## Remote Access

### Real-Time Monitoring
- Connection/hardware status
- Software/peripheral status
- Failure notifications

### Remote Controls
- Power controls
- Audio, backlight controls
- Software controls

### Troubleshooting
- Screenshots
- Remote desktop support

## Operational Efficiency

### OTA updates
- System/software updates
- File repository management
- App store

### Batch Controls
- 1-to-many batch reboot, etc.
- Time-saving tasks

### Setup Booster
- Software/peripheral watchlist
- Roles, rule templates

Note: Some functions may vary according to the product
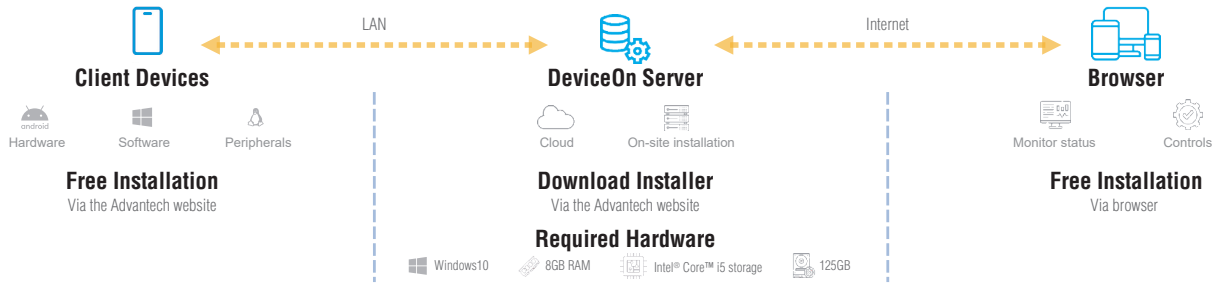
## System Architecture