AIMC-3403

Front Access Micro Computer, Intel 6th/7th Gen Core i CPU (LGA1151), 10 COM, 8 USB, and 4 Expansion slots

Features

- Desktop CPU computing performance with smart fan control
- Rich and single side I/O on the front for easy maintenance
- PCIe and PCI slots for add-on card expansion
- Dual 3.5" SATA HDD bays for large volume data storage
- Optional front I/O opening for 2 USB and 8-bit GPIO extending
- 2-Pin Remote Switch connector suitable for IEM equipment remote access

Specifications

Processor System	CPU	i7-7700/ i7-7700T	i7-6700/ i7-6700TE	i5-7500/ i5-7500T	i5-6500/ i5-6500TE	i3-7101E/ i3-7101TE	i3-6100/ i3-6100TE	Pentium G4400/ G4400TE	Celeon G3900/ G3900TE
	Core Number	4/4	4/4	4/4	4/4	2/2	2/2	2/2	2/2
	Base Frequency	3.6GHz / 2.9GHz	3.4GHz / 2.4GHz	3.4GHz / 2.7GHz	3.2GHz / 2.3GHz	3.9GHz / 3.4GHz	3.7GHz / 2.7GHz	3.3GHz / 2.4GHz	2.8GHz / 2.3GHz
	L3 Cache	8M/8M	8M/8M	8M/8M	6M/6M	3M/3M	3M/4M	3M/3M	2M/2M
	TDP (W)	65W/35W	65W/35W	65W/35W	65W/35W	54W	51W/35W	54W/35W	51W/35W
	Chipset	H110							
	BIOS	AMI EFI 128 Mbit SPI							
Memory	Technology	Dual Channel DDR4 2400 MHz SDRAM							
	Max. Capacity	32 GB, 16GB per DIMM socket							
	Socket	2 x 288-pin DIMM (Non-ECC)							
Graphics	Chipset Integrated	Integrated Intel HD Graphics							
	Display	1 VGA, Max. resolution 1920x1200 @ 60Hz 1 DVI-D, Max. resolution 1920x1200 @ 60Hz 1 DP, Max. resolution 4096x2304 @ 60Hz Support dual display (DP+DVI-D, DP+VGA or DVI-D+VGA)							
Expansion slot	PCI Express x16 (Gen 3)	1							
	PCI Express x1 (Gen 2)	2							
	PCI	1							
	Full-size Mini-PCIe	1 (support mSATA)							
Ethernet	Interface	10/100/1000 Mbps							
	Controller	2 x Realtek RTL8111G							
	Connector	2 RJ-45							
Drive bay	3.5" HDD (internal)	2 (SATA 3.0)							
I/O Interface	USB	4 USB3.0, 4 USB2.0 (2 more USB3.0 via optional kit)							
	Serial	10 COM							
	Remote switch (on/off)	1 (2-pin terminal block connector)							
	Audio	1 Mic-in, 1 Line-out							
Power Supply	Output Rating	AC 250W, ATX							
	Input Voltage	100 V_{AC} ~ 240 V_{AC}							
Cooling	System Fan	1 (8cm / 46.62CFM)							
	Air Filter	Optional module							
Miscellaneous	LED Indicators	Power, HDD							
	Control	Power on/off switch, Reset button							
Environment		Operating				Non-operating			
	Temperature	0 ~ 40 °C (32 ~ 104 °F)				-20 ~ 60 °C (-4 ~ 140 °F)			
	Humidity	95% @ 40 °C, non-condensing				95% @ 60 °C, non-condensing			
	Vibration	1Grms, random, 5~500Hz, 3 axes, 1 hr/axis				2Grms, sine wave, 5~500Hz, 3 axes, 1 hr/axis			
	Shock	10G, half sine wave, 11 ms duration							
	EMC	CCC							
	Safety	CCC							
Physical Characteristics	Dimension (WxHxD)	330 x 148 x 300 mm							
	Weight	6.3 kg							

All product specifications are subject to change without notice.

Dimensions

Unit: mm [inch]

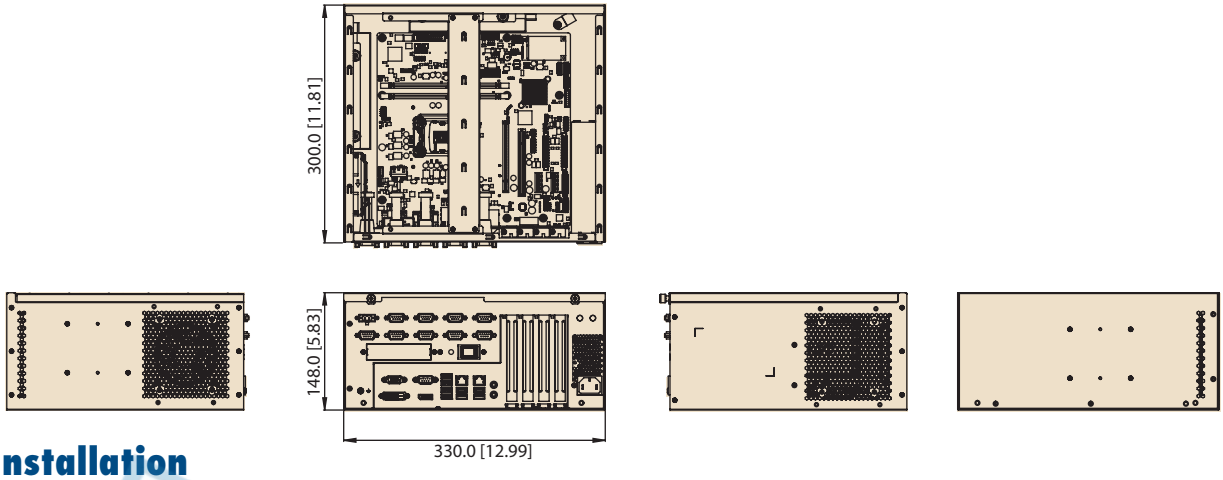

Installation

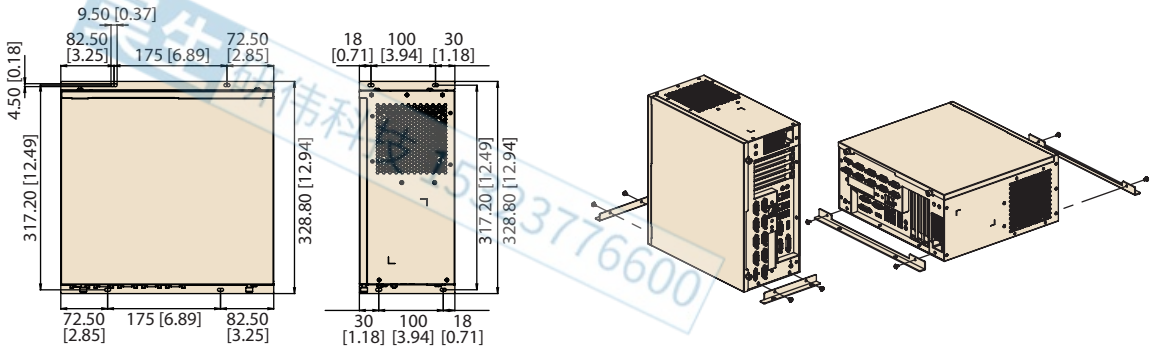

Front View

AIMC-3403-00A1

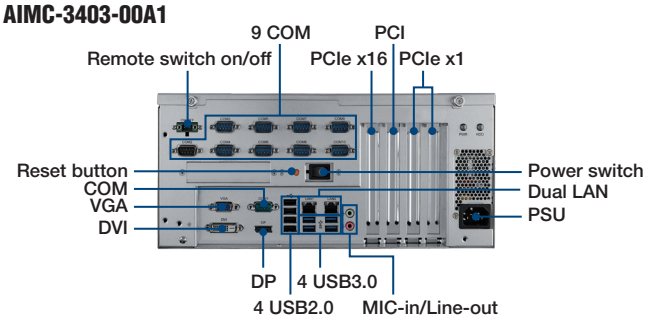

Ordering information

Part No.	VGA	DVI-D	DP	USB3.0	USB2.0	GbE	RS-232	PSU	PCIe Exp	PCI Exp
AIMC-3403-00A1	1	1	1	4 (up to 6 optional)	4	2	10	250W	1x16 + 2x1	1

* USB could be extended to 10 ports with optional module

Optional Accessory

Part Number	Description
TBD	USB3.0 kit
TBD	8-bit GPIO w/ 10-pin terminal block kit
9661340200E	Filter Module

CPU Cooler Option

Part Number	Description
1960053207N001	C.L R3 I-LGA1155 S-95W 92.9x92.9x46-SS 12V0.4A