MIO-5391

7th Gen Intel Core Mobile Processors, Xeon, i7, i5, i3 3.5" SBC w/ MIOe

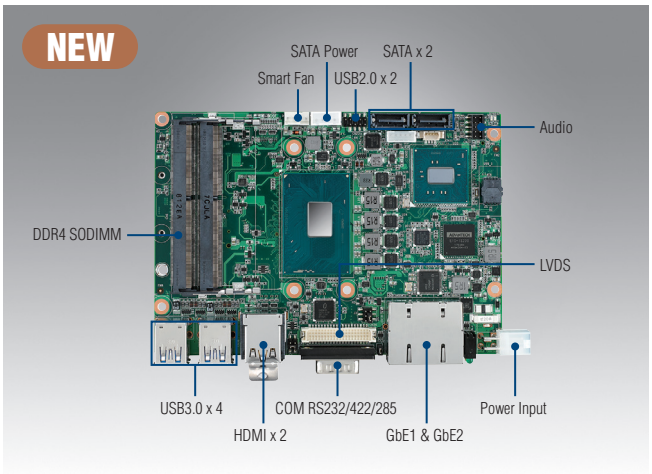

Features

- 7th Gen Intel Core i7/i5/i3 + PCH QM175 & Xeon + PCH CM238
- Dual channel DDR4 2400, Max 32GB
- 1 Intel i210 GbE & 1 Intel i219 GbE support iAMT, rich I/O: 2COM, SATA, USB3.0, SMBus/I2C,16 bit GPIO full-size Mini PCIe or mSATA /M.2 E Key support NVME, 12V Power input
- Full-size Mini PCIe or mSATA /M.2 E Key
- Support NVME (optional)
- Supports iManager, WISE-PaaS/RMM, emb. SW API

Software APIs: GPIO, SMBus/I²C, Watch Dog Timer, Backlight On/Off, Brightness, System Info, Hardware Monitor, System Throttling, Thermal Protection, Smart Fan, Data Security

Windows Embedded, iManager, DeviceOn, CE FC

Specifications

Platform	Processor	i7-7820EQ	i5-7442EQ	i3-7102E	E3-1505MV6
	Max. Frequency	3.7 GHz	2.9 GHz	-	4.0 GHz
	Base Frequency	3.0 GHz	2.1 GHz	2.1 GHz	3.0 GHz
	Core/Tread	4	4	2	4
	LLC	8MB	6MB	3MB	8MB
	CPU TDP	45W	25W	25W	45W
	Chipset	QM175	QM175	QM175	CM238
	BIOS	AMI UEFI 128Mbit			
Memory	Technology	DDR4 up to 2400MHz			
	Max. Capacity	Up to 32GB			
	Channel/Socket	Dual Channel 260P SO-DIMM (1 DIMM per Channel)			
	ECC Support	ECC is supported with Xeon SKU			
Graphics	Controller	Intel Gen 9 low power graphics			
	Max. Frequency	1GHz			
	Base Frequency	350MHz			
	Graphics Memory	Intel DMVT5.0, share memory up to 1024MB			
	3D/HW Acceleration	HW Codec: H.265/HEVC 8bit/10bit encode/decode; VP8 8bit encode/decode, VP9 10bit decode; MPEG2; JPEG; VC1/WMV9. Direct3D 2015/11.2/11.1/10/9; OpenGL5.0; OpenCL 2.0/1.2/1.0			
Display I/F	LVDS	48-bit LVDS up to WUXGA 1920 x 1200 at 60Hz Supports 3.3/5/12V for VDD power, 5/12V for inverter			
	HDMI	Supports 2 ports HDMI 1.4 for HD Video playback Max resolution up to 4096 x 2304 @ 30Hz			
	Mulit-Display	HDMI + LVDS, Dual HDMI + LVDS with each display combinations			
Ethernet	Controller	LAN1: Intel 219LM, LAN2: Intel 210IT			
	Speed	10/100/1000 Mbps			
External I/O	Ethernet	2 x RJ-45			
	VGA/HDMI/DP	-/2/-			
	USB3.0/USB2.0	4/-			
	COM Port	1 x RS-232/422/485			
	LED	Power status, HDD R/W			
	Power DC-Jack	Optional			
Internal I/O	SATA	2 x SATA GenIII 6.0Gbps			
	USB2.0	2			
	Serial Bus	SMBus default, I2C optional			
	COM Port	1 x RS-232/422/485			
	GPIO	16-bit general purpose input output I/O (Option to 2x COM ports, RS-232 only)			
	Audio	Realtek ALC888S, High Definition Audio (HD), Line-in, Line-Out, Mic-in			
	Invertor	3.3/5/12V for VDD power, 5/12V for inverter			
	LPC/SPI Bus	-			
	CAN Bus	-			
	Fan	1 x Smart Fan			
	Front Panel Control	Power-on, Reset, Buzzer, …			
Board Feature	Watchdog Timer	65536 level, 0–65535 sec			
	TPM	TPM2.0 (Infineon SLB9665)			
	iManager 3.0	Yes			
Storage	SATA	2, up to 6Gb/s (600 MB/s)			
	mSATA	1 x Full-size			
	NVME*	1, dimension: 2230; PCIex2			
Expansion	M.2	E-Key (PCIe x1, USB2.0)			
	mPCIe/mSATA	1 x full size mSATA with Sim holder			
	MI/O Extension	DDI x 1, 4 PCIex1, USB2.0, LPC, SMBUS, rest, Line out, Power on			
Power	Supply Voltage	Vin: DC 12V +/- 10%; RTC Battery: Lithium 3V/210mAH			
	Connector	ATX 2x2 pin 90D, optional DC-Jack or ATX 2x2 pin 180D			
	Power Management	AT, ATX			
	Max. Consumption	67.6W	50.729W	29.623 W	TBD
	Idle Consumption	8.2W	6.595W	5.333 W	TBD
Environment	Temperature	Operating: Standard: 0 – 60° C (32 – 140° F), Extend: -40 – 85° C (-40 – 185° F) Storage: -40 – 85° C (-40 – 185° F)			
	Humidity	Operating: 40° C @ 95% relative humidity, non-condensing Storage: 60° C @ 95%relative humidity, non-condensing			
	Vibration Resistance	3.5 Grms			
Certification	EMC	CE, FCC			
	Safety	-			
Mechanical	Dimensions	146 x 102 mm (5.7" x 4")			

15323776600

All product specifications are subject to change without notice.

Block Diagram

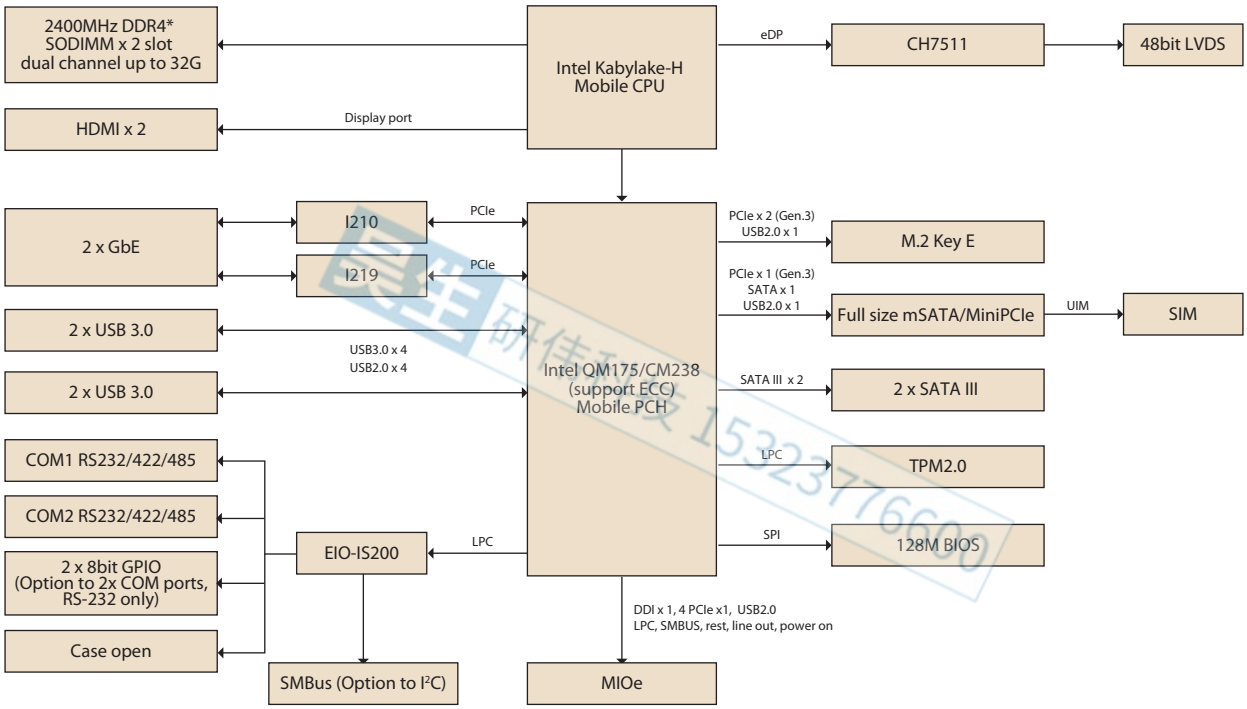

Ordering Information

Part No.	CPU	Max. Frequency	Core	TDP	DDR4 Memory	PCH	Thermal Solution	Operating Temperature
MIO-5391E4M-H0A1	E3-1505MV6	4.0GHz	4	45W	ECC support	CM238	Active	0 ~ 60 °C
MIO-5391C7-H0A1	i7-7820EQ	3.7GHz	4	45W	non-ECC	QM175	Active	0 ~ 60 °C
MIO-5391C5-U1A1	i5-7442EQ	2.9GHz	4	25W	non-ECC	QM175	Passive	0 ~ 60 °C
MIO-5391C3-U1A1	i3-7102E	2.1GHz	2	25W	non-ECC	QM175	Passive	0 ~ 60 °C
MIO-5391E4MZ2-H0A1	E3-1505MV6	4.0GHz	4	45W	ECC support	CM238	Active	-40 ~ 85 °C
MIO-5391C7Z2-H0A1	i7-7820EQ	3.7GHz	4	45W	non-ECC	QM175	Active	-40 ~ 85 °C
MIO-5391C5Z2-U1A1	i5-7442EQ	2.9GHz	4	25W	non-ECC	QM175	Passive	-40 ~ 85 °C

Packing List

Part No.	Description	Quantity
	MIO-5391 SBC	1
2006539100	Startup Manual	1
1700006291	M Cable SATA 7P/SATA 7P 30cm C=R 180/90	1
1700018785	SATA 35cm power cable	1
1700019414	A Cable D-SUB 9P(M)/2*5P-2.0 30cm for FWA-5442	1
1700019584	Audio Cable 2*5P-2.0/JACK*3 20cm	1
	mini Jumper pack	1
1960089060T001	Cooler (for TDP 45W SKU)	1
1960089142T001	Heatsink (for TDP 25W SKU)	1

Optional Accessories

Part No.	Description
1960090936N001	Heat spreader (16.7mm height)
1700002172	Internal 2 ports USB cable 17CM

Embedded OS/API

Embedded OS/ API	Part No.	Description
WIN10 for I7 & Xeon SKUs	20706WX9HS0017	img W10 19HL MIO-5391 64b 1809 ENU
WIN10 for I5 & I3 SKUs	20706WX9VS0020	img W10 19VL MIO-5391 64b 1809 ENU
Software API		SUSI 4.0/iManager 3.0
Software API		WisePaaS/DeviceOn

Rear I/O View