PCM-26R1EC

1-Port EtherCAT I/O Master mPCIe Card

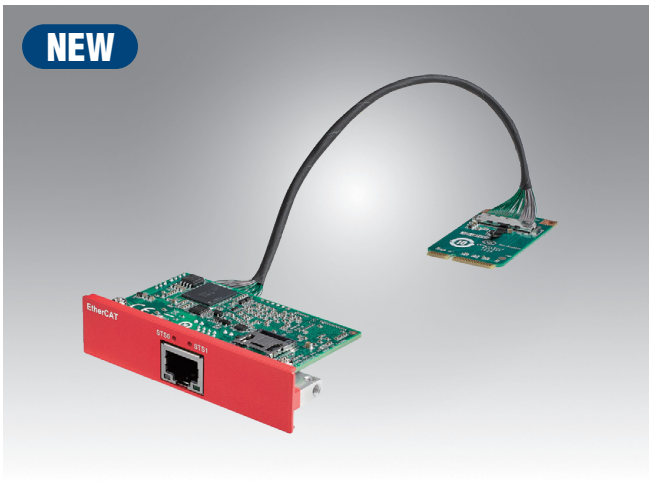

CE FCC

Features

- Meets Advantech iDoor technology standard
- PCI ExpressR Mini card specification revision 1.2 compliant
- Identical interface for all EtherCAT Motion Cotrollers
- Support high speed IO control in EtherCAT
- Connect I/O slaves automatically without ESI/ENI
- Easy-to-use EtherCAT integrated development environment
- Provide Error Detection and Diagnostics to monitor the entire EtherCAT network

Introduction

Advantech designed iDoor technology by support for the flexible optional connector arrangement for the Advantech embedded Automation computing platform including connector, internal cabling and a wide range of I/O and communication Modules. PCM-26R1EC is an ARM-based EtherCAT Master with Advantech iDoor technology. It can support as pure I/O master. Data exchange and memory allocation in EtherCAT communication can be executed automatically by the PCM-26R1EC series. You can benefit from EtherCAT's high-performance communication features without having to handle the complicated EtherCAT communication protocol. It also supports "Common Motion API" for all EtherCAT slaves connected automatically without ESI/ENI. Motion utility is easy to use and configure EtherCAT system and provides Error Detection and Diagnostics to monitor the entire EtherCAT network.

Specifications

General

- **Bus Type** PCI Express Mini Card Revision 1.2
- **Certification** CE, FCC
- **Connectors** 1 x Female RJ45
- **Dimensions** Module: 51 x 30 x 12.4 mm (2" x 1.18" x 0.49")
  I/O Plate: 81 x 19.4 x 45 mm (3.19" x 0.76" x 1.61")
- **Power Consumption** Typical : +3.3 V @ 650 mA

Communications

- **Controller** I/O Master
- **Protocol** EtherCAT
- **Signal interface** Isolation 10BASE-T/100BASE-TX
- **Speed** 100 Mbps, 10 Mbps (depending on loaded firmware)
- **Displays** STS, System status LED

Software

- **OS Device** Windows
- **Utility** Common Motion Utility

Environment

- **Humidity (Operating)** 10-95% RH, non-condensing
- **Operating Temperature** 0 ~ 60°C (32 ~ 140°F)
- **Storage Temperature** -20 ~ 85°C (-4 ~ 185°F)

Dimensions

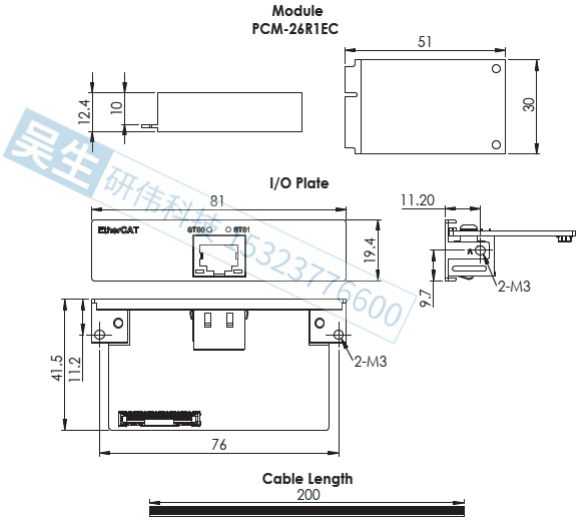

Ordering Information

Master

- **PCM-26R1EC-M00AE** 1-Port EtherCAT I/O Master mPCIe Card

All product specifications are subject to change without notice.