UNO-3283G/3285G

Intel® Core™ i7/ i5/ i3 Automation Computer with 2/4 PCI(e) Expansion Slots, 2 x GbE, 2 x mPCIe, HDMI, DVI-I

Features

- Intel® 6th Gen Core™ i7-6822EQ/ i5-6442EQ/ i5-6440EQ/ i3-6102E Processors with 8GB DDR4 memory
- 2 x GbE, 6 x USB 3.0, 2 x RS-232/422/485, 2 x RS-232 (pin header), 1 x DVI-I, 1 x HDMI
- UNO-3283G:1 x PCIe x16, 1x PCI, 2 x mPCIe (2 x full), 1x CFast slot, 1 x mSATA slot (optional)
- UNO-3285G:2 x PCIe x8, 2 x PCI, 2 x mPCIe (2 x full), 1x CFast, slot, 1 x mSATA slot (optional)
- Dual Hot-Swappable storage with thumb screw support for RAID 0/1
- Supports Fieldbus protocol by iDoor technology
- Dual power input for power redundancy
- Front LED indicator design for monitoring system status

Introduction

The high-performance fanless control cabinet PC UNO-3283G/ 3285G equipped with a Intel® 6th Gen Core™ i7/ i5/ i3 processor and QM170 PCH chipset, rich I/O including 6 x USB 3.0, 2 x GigaLAN, 2 x RS-232/422/485, and 2 x RS-232 (pin header) ports, as well as DVI-I and HDMI display interfaces, UNO-3283G/ 3285G is designed to deliver high-performance computing and maximum flexibility for industrial automation applications. The provision of two hot-swappable HDD/SSD bays and up to 4 expansion slots (2 x PCIe x8, 2 x PCI) supports the integration of modular peripherals and ensures flexible installation in diverse cabinet configurations. In addition to an exchangeable RTC battery that can be accessed via the removable top cover for convenient maintenance, the system features dual power inputs that ensure a stable power supply.

Specifications

General

- **Certification** CE, UL, CCC, FCC, BSMI
- **Dimensions (W x D x H)** UNO-3283G: 142 x 238 x 177 mm (5.6" x 9.4" x 7")
  UNO-3285G: 182 x 238 x 177 mm (7.2" x 9.4" x 7")
- **Form Factor** Regular Size
- **Mounting** Wall mount, Stand mount, Enclosure mount
- **Weight (Net)** 4kg (2.2 lbs)/ 4.5kg (9.9 lbs)
- **Power Requirements** 12-36 V_{DC}
- **Power Consumption** 44W (Typical), 120W (Max)
- **OS Support** WIN7/8, WES7, Win10 Ent. LTSC, AdvLinuxTU

System Hardware

- **BIOS** AMI UEFI 128Mbit Flash BIOS
- **Watchdog Timer** Programmable 255 levels timer interval, from 1 to 255 sec
- **Processor** Intel® Core™ i7-6822EQ 2.0GHz Quad Core, 8MB L2
  Intel® Core™ i5-6442EQ 1.9GHz Quad Core, 6MB L2
  Intel® Core™ i5-6440EQ 2.7GHz Quad Core, 6MB L2
  Intel® Core™ i3-6102E 1.9GHz Dual Core, 3MB L2
- **System Chip** Intel QM170
- **Memory** Built-in 8GB DDR4 2133 MHz, two sockets support up to 32GB
- **Graphics Engine** Intel HD Graphics
- **Ethernet** LAN A: Intel® i210-IT GbE, IIEEE802.1AS, 802.3az
  LAN B: Intel® i219-LM GbE, Intel® AMT, IEEE802.1AS, 802.3az
- **LED Indicators** LEDs for Power, LAN, COM (Tx/Rx), battery and HDD
- **Storage** One mSATA slot; One CFast slot
  Two built-in 2.5" SATA HDD brackets with support for RAID 0/1. (Compatible with 9.5mm height HDD)
- **Expansion** UNO-3283G: 2 Full-size mPCIe, 1 x PCIex16, 1 x PCI
  UNO-3285G: 2 Full-size mPCIe 2 x PCIex8, 2 x PCI

I/O Interfaces

- **Serial Ports** 2 x RS-232/422/485 with DB9 connectors
  RS-485 auto flow control, 50~115.2kbps, 2 x RS-232 (optional pin header)
- **LAN Ports** 2 x RJ45, 10/100/1000 Mbps IEEE 802.3u 1000BASE-T Fast Ethernet
- **USB Ports** 6 x USB 3.0 Ports
- **Displays** 1 x DVI-I, supports 1920 x 1080 @ 60Hz 24bpp
  1 x HDMI 1.4a, supports 1920 x 1080 @ 60Hz 24bpp
- **Audio** Mic-in, Line-In, Line-Out (Pin Header) (Optional)
- **Power Connector** 2 x 3 Pin, terminal Block to support dual power input and relay output

Environment

- **Operating Temperature** -20 ~ 60°C (-4 ~ 140°F) with 0.7m/s airflow environment
  0~50°C (32 ~ 122°F) for UNO-3283G-6541AE
- **Storage Temperature** -40 ~ 85°C (-40 ~ 185°F)
- **Relative Humidity** 10 ~ 95% RH, non-condensing
- **Shock Protection** Operating, IEC 60068-2-27, 50G, half sine, 11ms (SSD)
- **Vibration Protection** Operating, IEC 60068-2-64, 4Grms, random, 5 ~ 500Hz, 1hr/axis (SSD); 1.5Grms, random, 5 ~ 500Hz, 1hr/axis (HDD)

美生 研伟科技 13523776600

Dimensions

Unit: mm

UNO-3283G

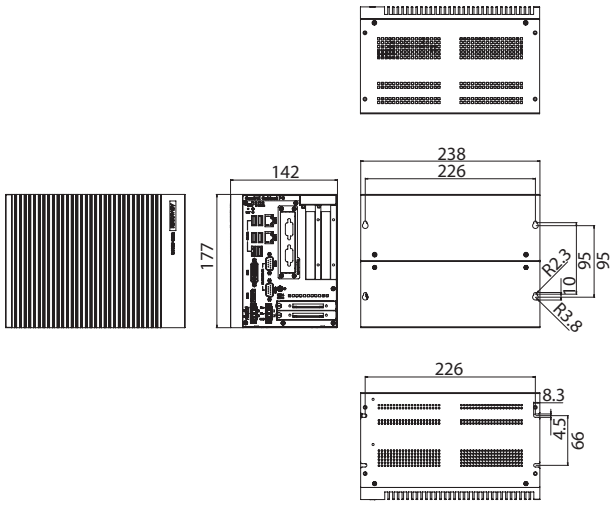

UNO-3285G

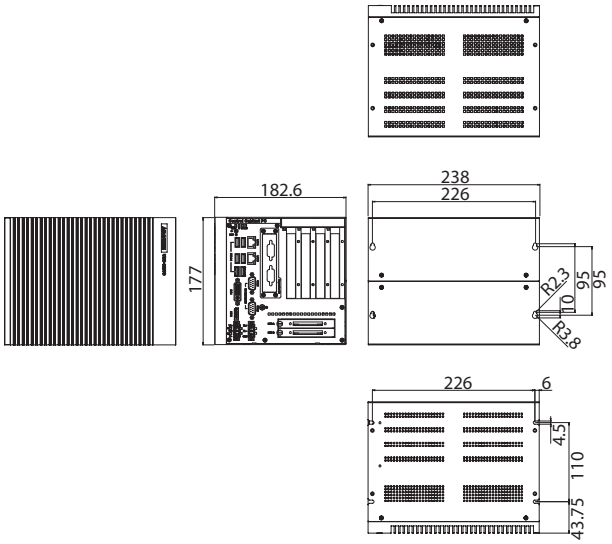

Installation Scenario

Stand mount

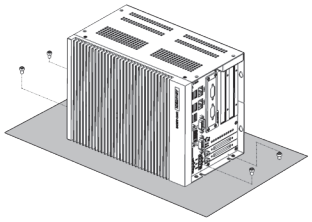

Wall mount

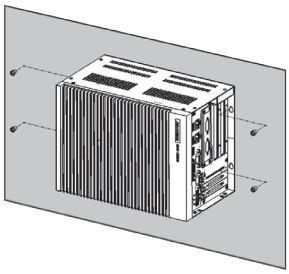

Enclosure Mount

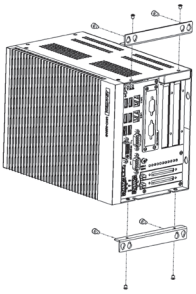

Wall mount

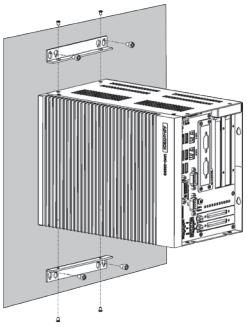

*Mounting kit included in default package

I/O View

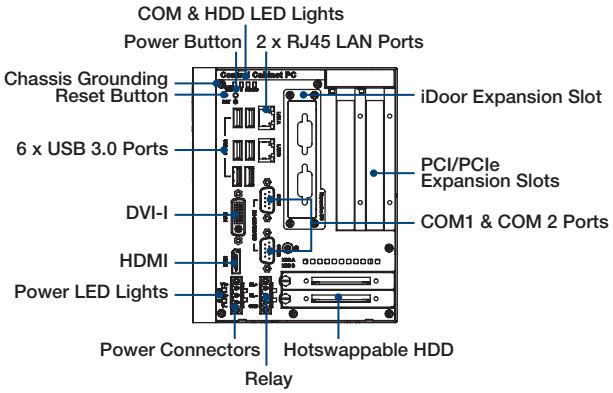

Please note: If some optional modules are offered with the system, additional system certificates may be required in certain regions/countries.
Please contact Advantech for certificate compliance.

Ordering Information

	Ordering part number	CPU	Audio	PCI/PCIe	mPCIe	LAN	COM	USB
With Audio version	UNO-3283G-634AE	i3-6102E	Min-in, Line-in, Line out (Pin header)	1 x PCIex16 1 x PCI	2	2	2	6
	UNO-3283G-6541AE	i5-6440EQ						
	UNO-3283G-654AE	i5-6442EQ						
	UNO-3283G-674AE	i7-6822EQ						
	UNO-3285G-634AE	i3-6102E		2 x PCIex8 2 x PCI				
	UNO-3285G-654AE	i5-6442EQ						
	UNO-3285G-674AE	i7-6822EQ						
Without Audio version	UNO-3283G-634AO	i3-6102E	x	1 x PCIex16 1 x PCI				
	UNO-3283G-6541AO	i5-6440EQ						
	UNO-3283G-654AO	i5-6442EQ						
	UNO-3283G-674AO	i7-6822EQ						
	UNO-3285G-634AO	i3-6102E		2 x PCIex8 2 x PCI				
	UNO-3285G-654AO	i5-6442EQ						
	UNO-3285G-674AO	i7-6822EQ						

Optional Expansion Type

P/N	Support Model	Expansion Type
9893U20500E	UNO-3285G	4 x PCI slot
9893U20700E	UNO-3283G	2 x PCI slot
9893U20800E	UNO-3283G	2 x PCIex8 slot

iDoor Modules

- **PCM-2300MR-AE** MR4A16B, MRAM, 2 MByte, mPCIe
- **PCM-24R2PE-AE** Intel i350, GbE, PoE IEEE 802.3af, PD, RJ45 x 2
- **PCM-24S2WF-BE** 802.11 a/b/g/n/ac 2T2R w/BT4.1, Atheros QCA6174A
- **PCM-26D2CA-AE** SJA1000 CANbus, CANopen, DB9 x 1
- **PCM-24D2R4-BE** 2-Ports Isolated RS-422/485 mPCIe, DB9
- **PCM-24D2R2-BE** 2-Ports Isolated RS-232 mPCIe, DB9
- **PCM-24D4R4-BE** 4-Ports Non-Isolated RS-422/485 mPCIe, DB37
- **PCM-24D4R2-BE** 4-Ports Non-Isolated RS-232 mPCIe, DB37
- **PCM-27D24DI-AE** 24-Channels Isolated Digital I/O with counter mPCIe, DB37
- **PCM-24R1TP-AE** 1-Port Gigabit Ethernet, Intel® 82574L, mPCIe, RJ45

Optional Accessories

- **96PSA-A150W24T2-3** 150W AC to DC power adapter
- **UNO-3283EM-AE** Extra 2 x COM ports extension kit
- **UNO-3283PR-AE** Remote Power & Reset extension kit
- **9893UH04000** Trusted Platform Module 2.0 (support from BIOS v1.17)
- **1702002600** Power Cable US Plug 1.8 M
- **1702002605** Power Cable EU Plug 1.8 M
- **1702031801** Power Cable UK Plug 1.8 M
- **1700000596** Power Cable China/Australia Plug 1.8 M
- **1700029839-01** 4-pin to 4-pin power cable for PCI/PCIe card. (5V&12V)
- **1700024858-01** 2x2 pin to 2x2 pin power cable for PCI/PCIe card. (12V&12V)

Embedded O/S

- **2070015316** Img WIN10ENT 2016LTSB V6.01B056 UNO-328xG (i7)
- **2070015317** Img WIN10ENT 2016LTSB V6.01B056 UNO-328xG (i5/i3)
- **20703WX9HS0011** Img W10 LTSC 2019 x64 V6.04 B046 UNO-328xG (i7)
- **20703WX9VS0012** Img W10 LTSC 2019 x64 V6.04 B046 UNO-328xG (i3/i5)
- **20703LLU1S0003** Image AdvLinuxTu V1.0.5 x86 for UNO-328xG
- **20703LLU1S0004** Image AdvLinuxTu V1.0.5 x64 for UNO-328xG
- **20703WE7PS0024** Img WS7P x86 MUI V4.19 B009 for UNO-328xG