BB-WSD2C21150
BB-WSD2C06010
BB-WSD2C31010
BB-WSD2M06010
BB-WSD2M31010
BB-WSD2M3101P2K
BB-WSD2M3101R100

Wzzard™ Mesh Wireless Sensors
– for Industrial Applications

PRODUCT FEATURES

+ Ultra-low power 802.15.4e SmartMesh® IP technology
+ Communicates with SmartSwarm-342 gateway via scalable and reliable wireless mesh networks
+ Connect to most any industry standard sensors
+ Rugged, IP67 rated, fiber reinforced polyester PBT enclosure
+ MQTT and JSON IoT protocol to application platform
+ Sensor interface cable and antenna included
+ UL Listed C1/D2 for hazardous locations (conduit models only)

Wireless Connectivity Where You Need It
The Wzzard™ intelligent wireless sensor platform creates a complete, quick and easy connectivity stack between your sensors and application – on your network or the Internet. The platform uses Wzzard mesh sensor edge nodes and a wireless 802.15.4e SmartMesh IP network to transmit sensor data to a SmartSwarm Gateway. The gateway can connect to the Internet via wired connections or cellular data networks and communicate with application platforms using the MQTT IoT protocol and JSON data formats.

Wzzard mesh wireless sensor nodes can accommodate virtually any industry-standard external sensors. Connections can be made via M12 connector or conduit fitting. The nodes provide a wide variety of sensor interface options, including general purpose analog input, digital input/output and thermocouple. All nodes contain an internal temperature sensor.

Secure, Reliable and Highly Scalable Wireless Networking
The 802.15.4e Wzzard platform uses mesh networking and time-synchronized channel hopping to provide up to 99.999% connectivity, even in the most demanding RF environments. New nodes may be added at any time and the SmartMesh IP network will dynamically self-configure as new nodes are added or removed.

Easy Configuration and Installation
Configuration of the Wzzard sensor platform is easy via the SmartSwarm Gateway. Nodes can be configured with scaling information, eng. units, friendly names, geo-location and other descriptive information.

The platform simplifies physical installation, too. Nodes can be attached to any surface via mounting ear flanges and screws or the embedded magnetic base. Magnetic mount is convenient for RF link location determination or other purposes. (Permanent use of the magnetic mount is not approved for UL installations.) The IP67 rated, fiber reinforced polyester PBT housing makes the units deployable in any industrial or commercial environment.

Intelligence at the Network Edge
The Wzzard wireless platform places intelligence at the network edge. The Wzzard mesh wireless sensor nodes can be configured to communicate data only when specified threshold or alert levels are exceeded. When reporting, they can associate useful information like geo-location, device name and uptime. This eliminates unnecessary network traffic, eases the processing burden on upstream resources and cuts the cost of cellular data plans when the gateway is using the cellular data network. Thanks to low-power wireless technology and programmable time synchronization, the Wzzard mesh wireless sensor nodes can operate for many years on battery power.

SPECIFICATIONS

POWER	
Internal	(2) 3.6V 2400 mAH Lithium Thionyl Chloride AA Batteries
Battery Life	>5 years – based on 1 min. sensor sampling and reporting
Optional External Input Voltage	10-30 VDC @ 40mA peak
SENSOR POWER OUT	
Switched Vbat	Battery Power – Turned on at time of measurement (20 mA max)
Switched Vref	3.3V (+/- 0.1%) – Turned on at time of measurement (20 mA max)
MECHANICAL	
Connection Options	Conduit (UL Type 3 outdoor approved): 12.7mm (0.5 in) - includes (1) one sensor interface cable - 8-pin 26-gauge wire harness, 1.8 m (6 ft) (Model# BB-WSCACO-6)
	M12 connector (Not UL rated for outdoor installations.)
Sensors	Analog Input (0 -10 VDC, 0 - 20 mA, 4 - 20 mA)
	Digital Input (0 - 48 VDC)
	Digital Input Frequency 1-1K Hz (accuracy +/- 1 Hz)
	Digital Input Counter
	Integrated Temperature
	Thermocouple (J, K, N, R, S, T, B, E)
	Digital Output, Sinking, up to 100mA @ 30VDC
External Antenna (included)	RP-SMA, Omni-directional, 3.8 dBi, 2.4 GHz (included)
	Dimensions: 194 mm (7.64 in)
Mounting Options	(4) Mounting Ears, M5 (#10) screws (UL approved option)
	Magnetic Mounting (via internal enclosure magnet) Pull Force 2.13 kg (4.7 lb) Note: Magnetic mounting (all models) not rated for UL installations.
Enclosure	IP67 rated fiber reinforced polyester PBT
Weight	0.34 kg (0.75 lb)
TECHNOLOGY	
Wireless	802.15.4e, SmartMesh IP
Protocols	MQTT, JSON
LED	Network Connectivity
ENVIRONMENTAL	
Installation	Indoor/Outdoor Note: M12 models are rated for outdoor use (except in UL installations).
Operating Temperature	-40 to +80 °C (-40 to +176 °F)
Storage Temperature	-40 to +85 °C (-40 to +185 °F)
Operating Humidity	0 to 95% Non-condensing
WIRELESS SECURITY	
Device Authentication	
128-bit, AES-based Encryption – with multiple keys	
Message Integrity Check (MIC)	
Synchronized Key Changeovers	
Customized Key Rotation	

All product specifications are subject to change without notice.

BB-WSD2C21150
BB-WSD2C06010
BB-WSD2C31010
BB-WSD2M06010
BB-WSD2M31010
BB-WSD2M3101P2K
BB-WSD2M3101R100

ORDERING INFORMATION

MODEL NUMBER	DESCRIPTION	CONNECTOR	INCLUDES	UL LISTED C1/D2
BB-WSD2C21150	Industrial Cooler/HVAC Node	Conduit	2 Analog Inputs, 1 Digital Input, 1 Digital Output, 2 Thermocouples, 2 Thermistors, Internal Temperature	Indoor / Outdoor, w/ mounting ear installation
BB-WSD2C06010	Industrial Digital Input Node	Conduit	6 Digital Inputs, Internal Temperature	Indoor / Outdoor, w/ mounting ear installation
BB-WSD2C31010	Industrial Power Monitor Node	Conduit	3 Analog Inputs, 1 Digital Input, Internal Temperature	Indoor / Outdoor, w/ mounting ear installation
BB-WSD2M06010	Industrial Digital Input Node	M12	6 Digital Inputs, Internal Temperature	No (M12 connector not UL.)
BB-WSD2M31010	Industrial Power Monitor Node	M12	3 Analog Inputs, 1 Digital Input, Internal Temperature	No (M12 connector not UL.)
BB-WSD2M3101P2K	Industrial Power Monitor Node	M12	2 Analog Inputs, Vbat measurement, 1 Digital Input, Internal Temperature, Switched Vbat Power Out (2 sec.)	No (M12 connector not UL.)
BB-WSD2M3101R100	Industrial Power Monitor Node	M12	2 Analog Inputs, Vref measurement, 1 Digital Input, Internal Temperature, Switched 3.3V Power Out (100 ms)	No (M12 connector not UL.)

ACCESSORIES - sold separately

MODEL NUMBER	DESCRIPTION	COMPATIBLE NODES
BB-ACH2-DBAT-DP002	Antenna - dipole, 2.4/5 GHz, 2dBi, RPSMA, rubber duck, hinged (Replacement; 1 included with all nodes.)	All Industrial Nodes
BB-ZXTMT	Kit - Zlinx™ Xtreme conduit cable gland & hub	All Conduit Nodes
BB-WSCACO-6	Sensor interface cable, 8-pin 26-gauge wire harness, 1.8m (6ft) (Replacement; 1 included with conduit nodes.)	All Conduit Nodes
BB-WSCAM12-6	Cable - M12 pigtail, 8-pin, 1.8 m (6 ft)	All M12 Nodes
BB-JC10F50-V	Sensor - 50A clamp-on AC current, 0-5VDC Out	All Analog Input Nodes
BB-JC24S250-V	Sensor - 250A clamp-on AC current, 0-5VDC Out	All Analog Input Nodes
BB-JC36S500-V	Sensor - 500A clamp-on AC current, 0-5VDC Out	All Analog Input Nodes
BB-WCD-TM2M	Thermistor cable	BB-WSD2C21150
BB-WTJ-10-36-TT	Sensor - J-type thermocouple, #10 mounting hole, ungrounded	BB-WSD2C21150
BB-HS-104T2505402	Sensor - low power vibration/temperature sensor, 250mV/g	BB-WSD2M3101P2K
BB-WSDCBL-ACL-2	M12 signal conditioning cable for model# BB-HS-104T2505402	BB-WSD2M3101P2K
BB-T9602-3-A-1-G2	Sensor cable - temperature/humidity, 1.8 m (6 ft)	BB-WSD2M3101R100

MECHANICAL DIAGRAM

Units = [Millimeters] Inches

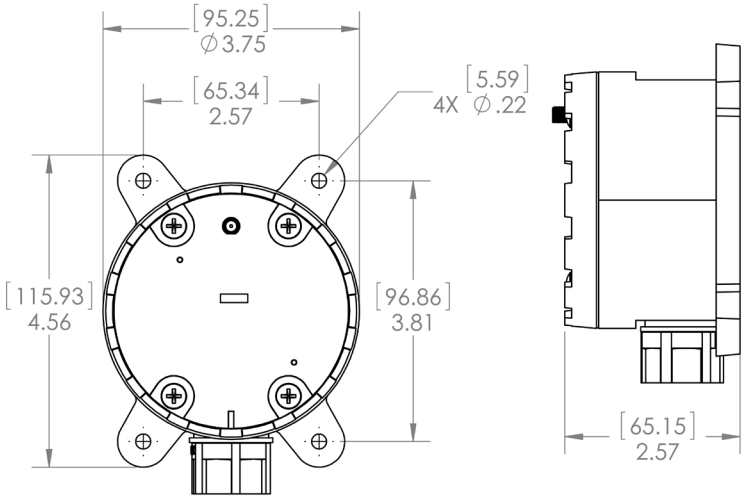

SENSOR INTERFACE SPECIFICATIONS

DIGITAL INPUTS	
Voltage Range	0-48 VDC
V_{IL}	0.4 V, maximum
V_{IH}	2.5 V, minimum
Pull-up Current	65 uA
Type	Sinking input (NPN)
Isolation	None
RATE/FREQUENCY INPUTS	
Frequency	Performs a 1 second measurement at each measurement/publish interval
	Digital input frequency: 1 - 1KHz (accuracy +/- 1 Hz)
	Uses falling edge or rising edge – based on Invert Enabled Setting
COUNTER INPUT	
Counter Inputs	1
Channels	Actively counts either falling edge (Invert Enabled) or rising edge (Invert Disabled)
	Can use a multiplier to convert to a unit type or count
	Shared with digital inputs
	Rolls over at 999999.9
ANALOG INPUTS	
Analog Inputs	2 or 3 (model dependent)
Input Range	0-10 VDC, 0-20 mA (software selectable)
Resolution	0.3 mV/1.3 uA
Input Load Resistance	59 K Ohms
Accuracy Variance	+/-25mV +/-0.05 mA
THERMOCOUPLE INPUT	
Types Supported	J, K, N, R, S, T, B, E

Accuracy

THERMOCOUPLE	Temperature Range	Ambient Temperature	Worst Case RSS Error	Probe Error
Type B	+95 to +1798 °C	B Type @ +25 °C	9.4 °C	0.5% of T, 0.25% of T
		B Type @ -40 to +85 °C	47.1 °C	0.5% of T, 0.25% of T
Type E	-200 to +1000 °C	C Type @ +25 °C	1.4 °C	1.7 °C, 1 °C
		C Type @ -40 to +85 °C	5.2 °C	1.7 °C, 1 °C
Type J	-210 to +1200 °C	J Type @ +25 °C	1.5 °C	2.2 °C, 1.1 °C
		J Type @ -40 to +85 °C	5.9 °C	2.2 °C, 1.1 °C
Type K	-200 to +1372 °C	K Type @ +25 °C	1.8 °C	2.2 °C, 1.1 °C
		K Type @ -40 to +85 °C	7.3 °C	2.2 °C, 1.1 °C
Type N	-200 to +1300 °C	N Type @ +25 °C	2.3 °C	2.2 °C, 1.1 °C
		N Type @ -40 to +85 °C	10.3 °C	2.2 °C, 1.1 °C
Type R	-50 to +1768 °C	R Type @ +25 °C	5.4 °C	1.5 °C, 0.6 °C
		R Type @ -40 to +85 °C	26.0 °C	1.5 °C, 0.6 °C
Type S	-50 to +1768 °C	S Type @ +25 °C	6.7 °C	1.5 °C, 0.6 °C
		S Type @ -40 to +85 °C	33.0 °C	1.5 °C, 0.6 °C
Type T	-200 to +400 °C	T Type @ +25 °C	1.7 °C	1 °C, 0.5 °C
		T Type @ -40 to +85 °C	7.2 °C	1 °C, 0.5 °C

Resolution	0.0078 °C
Accuracy Variance	0.20% of full-scale reading (0.25%, maximum)
THERMISTOR INPUT	
Type Supported	10K NTC
Temperature Range	-40 to +85 °C
Resolution	0.01 °C

Accuracy

THERMISTOR	Typ. Error	Worst Case Error	Worst Case RSS Error	Probe Error
	853 ppm (0.1 °C)	4103 ppm	2101 ppm	n/a

Accuracy Variance	Maximum +/- 0.5 °C over -40 to +85 °C temperature range
DIGITAL OUTPUTS	
Voltage Range	0-30 VDC
Output Type	Open drain
Output Current	Not to be less than 100 mA
Protection	Current limit protection
Isolation	None

INTEGRATED SENSORS

TEMPERATURE	CONDITIONS	MINIMUM	TYPICAL	TYPICAL	UNITS
Offset	Temperature Offset Error @ 25 °C		+/- 0.25		°C
Slope Error	-		+/- 0.033		°C / °C

SMARTMESH IP 802.15.4E RADIO SPECIFICATIONS

PARAMETER	CONDITIONS	MINIMUM	TYPICAL	MAXIMUM	UNITS
Frequency Band		2.400		2.4835	GHz
Number of Channels			15		
Channel Separation			5		MHz
Channel Clear Frequency	Where k = 11 to 25, as defined by IEEE 802.4.15		2405 + 5*(k-11)		MHz
Modulation	IEEE 802.15.4 Direct Sequence Spread Spectrum (DSSS)				
Raw Data Rate			250		kbps
Range	25 °C, 50% RH, +2dBi Omni-Directional Antenna, Antenna 2m above ground				
	Indoor		100		m
	Outdoor		300		m
Receiver Sensitivity	Packet Data Error Rate (PER) = 1%			-93	dBm
	P.E.R. = 50%			-95	dBm
Output Power	Delivered to a 50 Ω load			8	dBm

THIONYL CHLORIDE LITHIUM BATTERIES (2 supplied with product)

CHARACTERISTICS	CONDITIONS
Temperature Range	-40 to +85 °C
Nominal Capacity	2.4 Ah
Nominal Voltage	3.6 V
Diameter	14.5mm
Height	50.5mm

**Potential Hazard: Do not recharge, crush, disassemble or heat above 100 °C (212 °F).*

APPROVALS, DIRECTIVES, STANDARDS – BB-WSD2x Industrial Sensor Nodes

FCC, IC	
FCC Part 15 Class A, FCC Part 15.247, UKCA	
ICES-003	ITE Emissions for Canada
UL (All models w/ mounting ear installation; M12 model indoors only.)	
UL/CSA Class 1/Division 2, Groups A, B, C, D (Conduit Models Only)	
CE	
CE - Directives	2014/35/EU Low Voltage Directive 2014/53/EU Radio Equipment Directive 2011/65/EU amended by (EU) 2015/863 Reduction of Hazardous Substances Directive (RoHS) 2012/19/EU Waste Electrical and Electronic Equipment (WEEE)
CE - Standards	Radio Equipment Directive (RED)
CE - EMC	
ETSI EN 300 328 v2.1.1	EMC & Radio Spectrum Matters (ERM) Wideband Transmission Systems, 2.4 GHz ISM Band
ETSI EN 301 489-1 v2.1.1 ETSI EN 301 489-17 v3.2.0	Applied in accordance with the specific requirements of: EMC and Radio Spectrum Matters: Broadband Data Systems
EN 55032+AC, Class A	Information Technology Equipment (ITE) - RF Emissions
EN 55024	Information Technology Equipment (ITE) - Immunity Characteristics - Limits and Methods of Measurement
CE - SAFETY	
EN/IEC 61010-1 (3rd ed.)	Safety requirements for electrical equipment for measurement, control, and laboratory use (general requirements).
EN/IEC 61010-2-201 (1st ed.)	Particular requirements for control equipment
CE - RF EXPOSURE	
EN 62479	Assessment of compliance of low power electronics and electrical equipment with basic restrictions related to human exposure to electromagnetic fields (10 MHz to 300 GHz)
ENVIRONMENTAL	
IEC 60068-2-6	Sine Vibration: 4G, 10-500 Hz, 0.06 in. displacement
IEC 60068-2-27	Mechanical Shock: 50G, 11ms, 18 pulses