EPD-332

5.6" ePaper Solution Suite

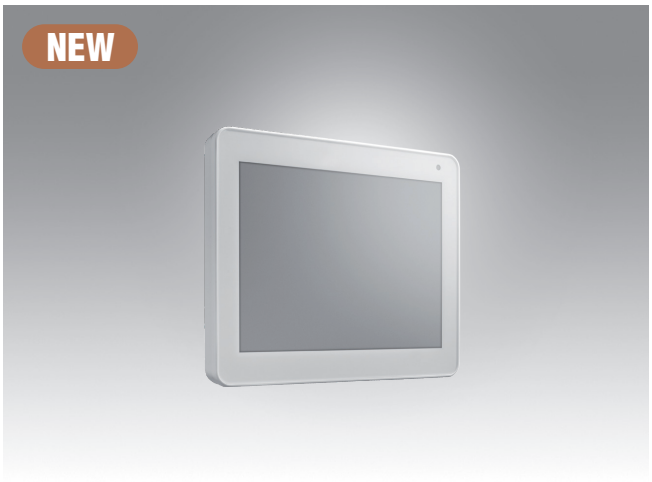

Features

- ARM Cortex-M3 Core Processor
- Supported IEEE 802.15.4 / 2.4 G Networks
- 5.65" ePaper Panel Display
- Great for Low Power Consumption
- Multiple I/O Control with One Button & Two Colors for LED
- Supported Temperature Range: 0 ~ 40 °C
- High Performance Integrated System with RTOS
- Supports Over-the-Air Upgrades (OTA)
- Solution with WISE-3240 Network Coordinator & ARK ePaper Manager Server

Introduction

EPD-332 supports the ultra-low power 2.4GHz RF wireless protocol integrated with 5.65" EPD in ARM Cortex-M3 processor. The module can support hospital, pharmacy, factory, warehouse and retail applications. With optimization on the power consumption and device management, your applications with low data rate requirements can achieve years long battery lifetimes across thousands of devices connections.

The Advantech EPD-332 provides multiple interfaces for application control which are highly integrated with the EPD driver and low power consumption system. EPD-332 can auto-join the network group with the WISE-3240 IoT Router. Data can be easily acquired and transformed into a different format to communicate with the ePaper Manager Server. System integrators can focus on application development and system management.

Specifications

Computing System	MCU	TI 32-bit ARM Cortex-M3 Processor
	Memory	RAM 28KB
Display	Screen Size	125.4 x 99.5 mm
	Resolution	600 x 448 pixels
	Color	Red/Black/White
Storage	Internal	Flash: 128 KB
	External	SPI Flash: 512 KB
Network	Standard	IEEE 802.15.4
	Frequency Band	2.4-GHz
	Channels	11~26
	Channel Separation	5MHz
	Transmit Power	-21dBm~ +5dBm
	Receiver Sensitivity	-100dBm
	RF Data Rate	250 Kbps
	Function	End node
	Antenna Connector	MHF Connector
	Antenna	FPC Antenna Antenna
Interface		LED x1 Function Key x1
Power	Battery	CR2450 x4 (2480mAh)
Environment	Operational Temperature	0 ~ 40 °C
	Non-Operational Temp.	-25 ~ 60 °C
	Operating Humidity	5 ~ 80% Relative Humidity, non-condensing
Physical Characteristics	Dimensions (W x H)	125.4 x 99.5 mm
	Weight	0.165KG with housing and battery
Operating System		RTOS
Certification	EMC	CE/FCC/Telec/NCC

* Note:
-The channel frequency selection can be supported by further plan.
-EPD Data Report and Wakeup behavior duration can be adjusted by different scenario from RESTful API
-System bundles wireless modules; which need RED compliance

研伟科技 15323776600

Dimensions

Unit: mm

Device

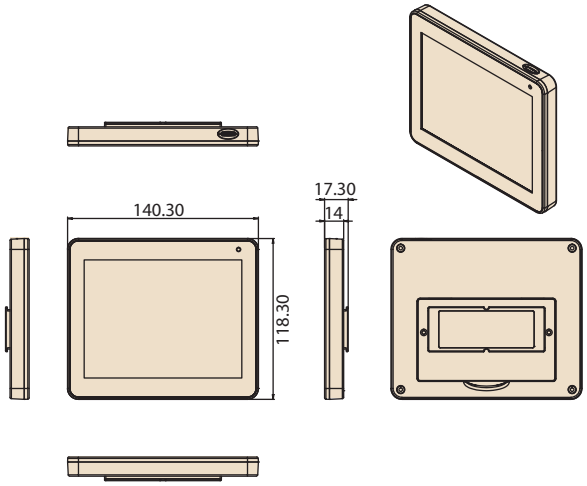

Device with Bracket

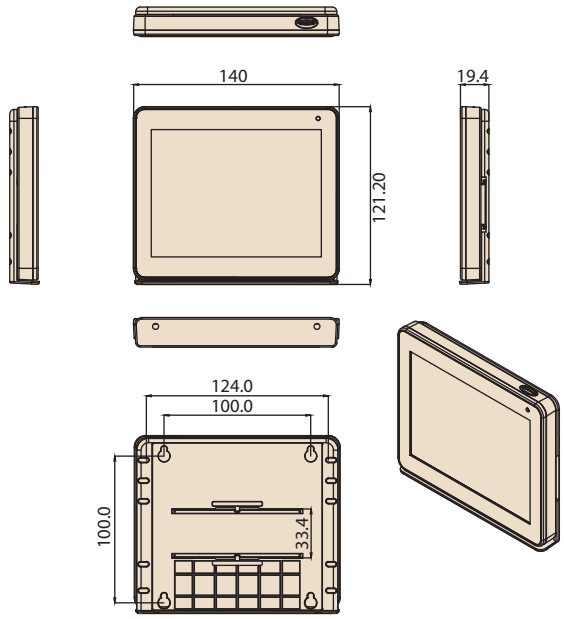

Ordering Information

Model Name	Part No.	Description
EPD-332	EPD-332-001	5.6" red/black/white panel color ePaper display device solution in 2.4G with TR3 panel
	EPD-332-011	5.6" red/black/white panel color ePaper display device solution in 2.4G for 20pcs package with TR3 panel

Ubuntu development kit ordering information

	Part No.	Description
EPD device	EPD-332-001 EPD-332-011	5.6" Wireless ePaper display device solution in 2.4G
Router	WISE-3240IOS-41A1E	Router with automotive grade for Europe
	WISE-3240IOS-41A1J	Router with automotive grade for Japan
	WISE-3240IOS-41A1N	Router with automotive grade for North America
	WISE-3240IOS-41A1T	Router with automotive grade for Taiwan
	WISE-3240IOS-41A1C	Router with automotive grade for China
	WISE-3240IOS-41A1E	Router with automotive grade for Europe
	WISE-3240IOS-41B1E	Router with commercial grade for Europe
	WISE-3240IOS-41B1T	Router with commercial grade for Taiwan
ePaper manager	ARK-1123H-EP2A2 for Entry	Ubuntu 18.4/128G SSD/8G RAM and build in ePaper Manager Software with 500 device licenses
	ARK-2250L-EP1A2 for Enterprise	Ubuntu 18.4/1T HD/16G RAM and build in ePaper Manager Software with 500 device licenses

Optional Accessories

Part No.	Description
1760002692-01	4 pcs CR2450 battery
1990032657T000	Wall Bracket
1940006309 Wall	bracket Glue

Packing List

Model Name	Part No.	Description
EPD-332	EPD-332-001 EPD-332-011	5.6" Red/Black/White ePaper device with battery

* All Eink Panel inspection criteria refer to E Ink CAS & Inspection standard document.
* Note: E Ink Recommend condition for storage:
  Temperature: 20 +-10 degree C
  Humidity : 60% RH+-10%RH, Non-condensing
* Note: If panel module have been put in low temperature between 0~-25 degree C for a while, we recommend to leave it between 20 to 30 degree C for 4 days before assembly.