# ARK-3500

## 3rd Gen. Intel® Core™ i3/ i5/ i7 with 2 Expansion slots and wide range power Fanless Box PC

Windows Embedded WISE-PaaS/RMM iManager LISTED E180881 CE FCC RoHS

## Features

- Supports Intel® Core™ i3/i5/i7 mobile processor(rPGA) + Intel QM77 PCH
- Triple independent display with 3rd gen Core i processor : DVI + HDMI + DisplayPort
- DDR3/DDR3L SO-DIMM memory support up to 16 GB
- 2 expansion slots with vary interface: PCI, PCIe x 1 & PCIe x 4
- 2 x miniPCIe slots with SIM card holders
- 9-34V wide range lockable DC jack design
- Versatile I/Os including 4 x high speed USB 3.0 and 8 x COM ports
- Flexible Storage Support including 2x mSATA, 1x CFast and 2x 2.5" SATA HDD/ SSD bays
- Supports iManager, WISE-PasS/RMM and Embedded Software APIs

## Specifications

| | | | | | |
|---|---|---|---|---|---|
| Processor System | CPU (rPGA) | Intel Core I7-3610QM | Intel Core i5-3610ME | Intel Core i3-3120ME | Celeron 1020E |
| | Frequency | 2.3 GHz (Quad Core) | 2.7 GHz (Dual Core) | 2.4 GHz (Dual Core) | 2.2 GHz (Dual Core) |
| | L3 Cache | 6 MB | 3 MB | 3 MB | 2 MB |
| | Watts | 45W | 35W | 35W | 35W |
| | System Chipset | Intel QM77 | | | |
| | BIOS | AMI EFI 64Mbit | | | |
| Memory | Technology | DDR3/DDR3L 1600MHz | | | |
| | Max. Capacity | 16 GB | | | |
| | Socket | 2 x 204-pin SO-DIMM | | | |
| Graphics | Chipset | Intel QM77 Integrated GFX Gen 7 | | | |
| | Graphic Engine | DirectX11, OpenGL 3.1, and Open CL 11; Hardware decode acceleration: AVC/H.264, MPEG-2, VC-1 | | | |
| | CRT | VGA integrated in DVI-I port | | | |
| | DVI-I | 1920 x 1200 @ 60 Hz | | | |
| | HDMI | Support HDMI 1.4, 1920 x 1200 @ 60 Hz | | | |
| | Display port | 2560 x 1600 @ 60Hz (Video only, and only support on 3rd generation processor) | | | |
| | Dual Display | VGA+DVI, VGA+HDMI, VGA+DP, DVI+HDMI, DVI+DP, HDMI+DP | | | VGA+DVI, DVI+HDMI, VGA+HDMI |
| | Triple Display | DVI-D + HDMI + DisplayPort (Main display) | | | N/A |
| Ethernet | LAN1 | 10/100/1000 Mbps Intel 82579LM GbE, support Wake On Lan | | | |
| | LAN2 | 10/100/1000 Mbps Intel I-210IT GbE, support Wake On Lan | | | |
| Audio | Interface | Realtek ALC892, High Definition Audio, Line-out, Mic-in | | | |
| I/O Interface | Serial Port | 4 x RS-232 ports, 4 x RS-232/422/485 port with auto flow control | | | |
| | USB | 4 x USB 3.0 ports (USB1,2,3,4); 2 x USB 2.0 ports (USB5,6) | | | |
| | DIO | 16 bit DIO | | | |
| Other | Watchdog Timer | 255-level timer interval , setup by software | | | |
| Expansions | Mini PCIe | 2 x Full-size Mini PCIe with SIM holder (Supports mSATA) | | | |
| | Add-on Card Slot | ARK-3500P-00A1E : 2 x PCI; Maximum card size: 110 mm (H) x 180 mm (L)<br>ARK-3500F-00A1E : PCIe x 1 + PCIe x 4; Maximum card size: 110 mm (H) x 180 mm (L)<br>Suggest maximum power consumption 10w for each slot | | | |
| Storage | HDD | Two 2.5" SATA HDD Bays with maximum device height 9.5mm, SATA III, Gen 3 Support (Max. Data Transfer Rate 600 MB/s), Support SATA RAID 0, 1 | | | |
| | Solid State Disk | 1 x CFast Card slot | | | |
| Software Support | Microsoft Windows | Windows 8 , Windows 7, XP Professional (32bit), XP Embedded (32bit) | | | |
| | Linux | Ubuntu 12.04 | | | |
| Power Requirements | Power Type | AT/ATX | | | |
| | Power Input Voltage | 9 ~ 34 $V_{DC}$ | | | |
| | Power Adapter | AC to DC, DC 12V , 120W (Optional) | | | |
| Power Consumption | Typical | 19.2W | 16.4W | 14.8W | 16.4W |
| | Max. | 60W<br>Max. : test with 100% CPU loading and HDD R/W access only. | 36.5W | 30W | 31.8W |
| Mechanical | Construction | Aluminum housing | | | |
| | Mounting | Desk/wall-mounting | | | |
| | Dimensions (W x H x D) | 290 x 110 x 232mm (11.4" x 4.33" x 9.13") | | | |
| | Weight | 4.8 kg | | | |
| Environment | Operating Temperature | with extended temp peripherals: -10 ~ 60° C with 0.7m/s air flow<br>with HDD: 0 ~ 40° C with 0.7m/s air flow | | | |
| | Storage Temperature | -40 ~ 85° C | | | |
| | Relative Humidity | 95% @ 40° C (non-condensing) | | | |
| | Vibration During Operation | With SSD: 5 Grms, IEC 60068-2-64, random, 5 ~ 500 Hz, 1 hr/axis. | | | |
| | Shock During Operation | With SSD: 30 G, IEC 60068-2-27, half sine, 11 ms duration | | | |
| | EMC | CE/FCC Class A, CCC, BSMI | | | |
| | Safety | CB, UL, CCC, BSMI | | | |

研伟科技 15323776600



All product specifications are subject to change without notice

## Dimensions

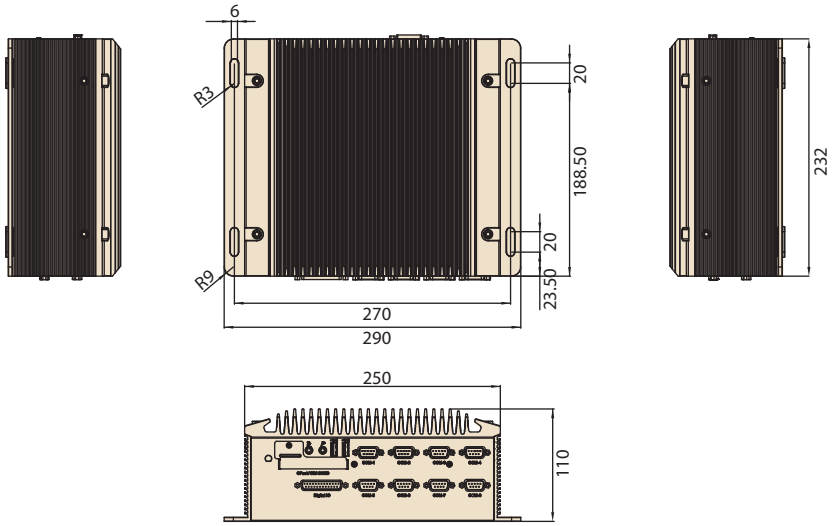


### Front Panel External I/O Mechanical Layout/Drawing

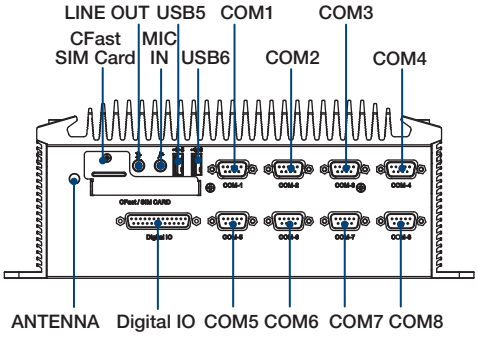


### Rear Panel External I/O Mechanical Layout/Drawing

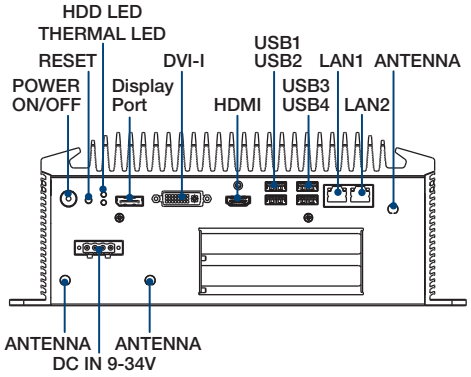


## Ordering Information

| Part No. | CPU | DDR3 | DP | HDMI | DVI-I | RS-232/ 422/485 | RS-232 | USB 3.0 | USB 2.0 | MiniPCIe | SIM | DC input | Expansion |
|---|---|---|---|---|---|---|---|---|---|---|---|---|---|
| ARK-3500P-00A1E | PGA Socket Type | up to 16 GB | 1 | 1 | 1 | 4 | 4 | 4 | 2 | 2 | 2 | 9 ~ 34 V | 2 x PCI |
| ARK-3500F-00A1E | PGA Socket Type | up to 16 GB | 1 | 1 | 1 | 4 | 4 | 4 | 2 | 2 | 2 | 9 ~ 34 V | 1 x PCIe x 1<br>1 x PCIe x 4 |

Note: Memory, storage and operating system bundled by request.

## Packing List

| Part Number | Description |
|---|---|
| 1654009744 | DVI-I to VGA adaptor |
| 968EMLSAP2 | SUSI CD |
| - | User Manual (Simplified Chinese) |
| - | China RoHS for ARK-3500 Electronic Pollution 1st |
| 1652003234 | 4 pin DC in terminal block |
| 1930001241 | HDD screws |
| 2190000902 | CARDBOARD-WARRANTY REV. A2 |

## Embedded OS

| Part Number | Description |
|---|---|
| 2070012570 | WES2009 32bit 24MUI |
| 2070012650 | WES7E 32bit ENG/CHT/CHS/JPN |
| 2070012706 | WES7E 64bit ENG/CHT/CHS/JPN |
| 2070014612 | WES7P 32bit ENG/CHT/CHS/JPN |
| 2070012628 | WES7P 64bit ENG/CHT/CHS/JPN |
| 2070013970 | WES7E 32bit ENG/CHT/CHS/JPN (RAID) |
| 2070013971 | WES7E 64bit ENG/CHT/CHS/JPN (RAID) |

## Optional Items

| Part Number | Description |
|---|---|
| 96PSA-A150W19P4-1 | AC-to-DC Adaptor, DC 19V, 150W, -20 ~ 70° C |
| 1702002600 | Power cable 3-pin 180cm, USA type |
| 1702031801 | Power cable 3-pin 180cm, UK type |
| 1702002605 | Power cable 3-pin 180cm, EU type |
| 1700000237 | Power cable 3-pin 180cm, with PSE |
| 96MPI7M-2.3-6M9T | CORE 2.3G 6M 988P 4CORE I7-3610QE(G) |
| 96MPI5-2.7-3M9T | CORE 2.7G 3M 988P 2CORE I5-3610ME(G) |
| 96MPI3M-2.4-3M9T | CORE 2.4G 3M 988P 2CORE I3-3120ME(G) |
| 96MPCM-2.2-2M9T | CELERON M 2.2G 2M 988P 2CORE 1020E(G) |
| | CORE 2.9G 4M 988P 2CORE I7-3520M |