ARK-3520P

6th Gen. Intel® Core™ i3/ i5/ i7 with Expansion slots and wide range power Fanless Box PC

Features

- Intel® Core™ i3/i5/i7 processor (BGA)
- Triple independent display: VGA + HDMI + Option Display
- DDR4 SO-DIMM memory up to 32 GB
- Flexible Expansion via PCI/PCIex4
- 9-36V wide range Power input
- Versatile I/Os including 6 x high speed USB 3.0 and 8 x COM ports
- 2 Removable 2.5" HDD drive bay
- Advantech iDoor module compatible

Windows Embedded SUSI API WISE-DeviceOn CE FCC RoHS

Specifications

Processor System	CPU	Intel Core i7-6820EQ	Intel Core i5-6440EQ	Intel Core i3-6100E (support by T-P/N)
	Frequency	2.8 GHz (Quad Core)	2.7 GHz (Quad Core)	2.7 GHz (Dual Core)
	L3 Cache	8 MB	6 MB	3 MB
	Watts	45W	45W	35W
	System Chipset	Intel QM170		
	BIOS	AMI EFI 128Mbit		
Memory	Technology	DDR4 2133 MHz		
	Max. Capacity	32 GB		
	Socket	2 x 260-pin SO-DIMM		
Graphics	Chipset	Intel QM170 Integrated GFX Gen 9		
	Graphic Engine	Direct x 12, OpenGL 4.4 HW Encode: H.265/HEVC, H.264/MPEG-4 AVC, MPEG-2, JPEG/MJPEG and VP8. HW Decode: H.265/HEVC, H.264/MPEG-4 AVC, MPEG-2, VC-1/WMV9, JPEG/MJPEG, VP8 and VP9		
	VGA	1920x1200@ 60Hz		
	HDMI	1 HDMI port, HDMI 1.4b for HD video playback, 3840x2160@30Hz		
	Optional 3rd Display module	DP		
	Triple Display	VGA+HDMI + 3rd display module		
Ethernet	LAN1	10/100/1000 Mbps Intel I219-LM GbE, support Wake On Lan		
	LAN2	10/100/1000 Mbps Intel I210 GbE, support Wake On Lan		
Audio	Interface	Realtek ALC888S, High Definition Audio, Line-out, Mic-in		
Others	Watch dog Timer	255-level timer interval, setup by software		
	TPM	TPM 2.0 (Optional by project support)		
I/O Interface	Serial Port	4 x RS-232 ports, 4 x RS-232/422/485 port with auto flow control; COM 1,2 support 5V/12V power supply (by jumper)		
	USB	6 x USB 3.0 ports; 2 x USB 2.0 ports		
	DIO	16 bit DIO		
	P/S2	1 Port support by cable and bracket (Optional)		
	Parallel Port	D-sub 25pin connector (Optional)		
Expansions	Mini PCIe	2 x Full-size Mini PCIe (1 x support mSATA, 1 x support SIM holder #1)		
	M.2	1 x E key for WiFi module #1		
	i Door	1 set (Optional)		
	Add-on Card Slot	2 Slots PCI (Default) Maximum card size: 110 mm (H) x 180 mm(L) 2 Slots PCIe x 4 (Optional) Maximum card size: 110 mm (H) x 180 mm(L) Suggest maximum power consumption 10W for each slot		
Storage	HDD	Two removable 2.5" SATA HDD Bays with maximum device height 15mm, SATA III, Gen 3, Support SATA RAID 0, 1		
	mSATA	1x mSATA socket (Share 1 Mini PCIe)		
Software Support	Microsoft Windows	Windows 10, Windows 8.1, Windows 7		
	Linux	By Project Support		
Power Requirements	Power Type	AT/ATX		
	Power Input Voltage	9 ~ 36 V_{DC}		
	Power Adapter	AC to DC, 150W (Optional)		
Power Consumption (CPU/Memory Only)	Typical	11.4W		
	Max.	68.4W	46.5W	42.75W
Mechanical	Construction	Aluminum housing		
	Mounting	Desk/wall-mounting		
	Dimensions (W x H x D)	220 x 101 x 233 mm (8.66" x 3.98" x 9.17")		
	Weight	4.4 kg (9.7 lb)		
Environment	Operating Temperature	with extended temp peripherals: -20 ~ 60° C with 0.7m/s air flow with HDD: 0 ~ 40° C with 0.7m/s air flow		
	Storage Temperature	-40 ~ 85° C		
	Relative Humidity	95% @ 40° C (non-condensing)		
	Vibration During Operation	With SSD: 3 Grms, IEC 60068-2-64, random, 5 ~ 500 Hz, 1 hr/axis.		
	Shock During Operation	With SSD: 30 G, IEC 60068-2-27, half sine, 11 ms duration		
	EMC	CE/FCC Class A, CCC, BSMI		
	Safety	LVD(62368), CCC, BSMI		

* By Project Support

#1 SIM holder and M.2 slot are hardware interfaces for wireless communication integration only. System level RF certification is not available.

昊伟科技 15323776600

Dimensions

Unit: mm

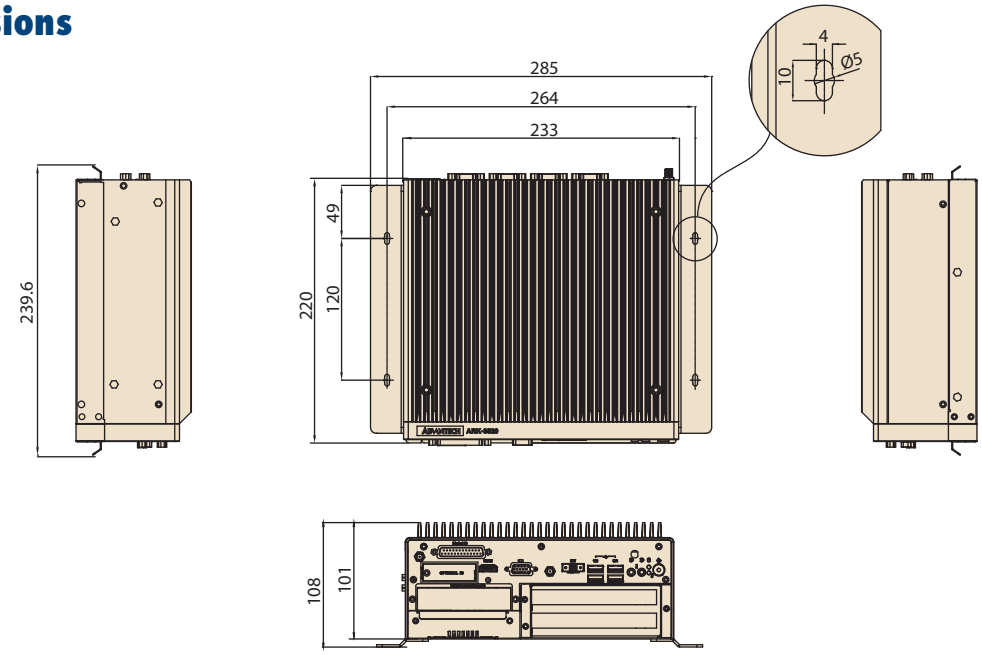

Front Panel External I/O Mechanical Layout/Drawing

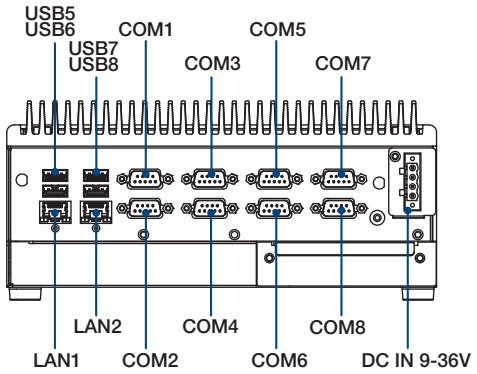

Rear Panel External I/O Mechanical Layout/Drawing

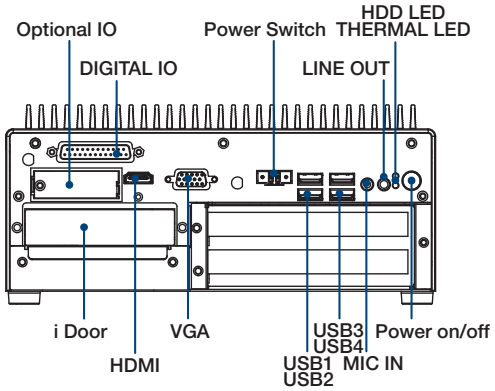

Ordering Information

Part No.	CPU	DDR4	VGA	HDMI	Option 3rd display module	RS-232/ 422/485	RS-232	USB 3.0	USB 2.0	MiniPCIe	SIM	DC input	Expansion
ARK-3520P-U8A1E	i7-6820EQ	up to 32G	1	1	1	4	4	6	2	2	1	9 ~ 36 V	2 x PCI
ARK-3520P-U7A1E	i5-6440EQ	up to 32G	1	1	1	4	4	6	2	2	1	9 ~ 36 V	2 x PCI

Note: Memory, storage and operating system bundled by request.

* ARK-3520P i3-6100E support by T-PN with MOQ 30pcs

Packing List

Part Number	Description
-	ARK-3520 Unit
-	User Manual (Simplified Chinese)
-	China RoHS
1652003234	4 pin DC in terminal block
-	2 pin power switch terminal block
1960075470N031	2 x mounting bracket

Embedded OS

Part Number	Description
2070014628	WES7E 64bit EN/JP/TC/SC
2070014627	WE8.1 64bit IndustryPro EN/JP/TC/SC
2070014899	Win10 Ent X64 (High End) for i7-6820EQ
2070014898	Win10 Ent X64 (Value) for i5-6440EQ

ARK-3520 Default SKU Option Items

Optional Item for Default SKU

Part Number	Description
96PSA-A150W19P4-3	AC-to-DC Adapter, DC19V 150W, 0 ~ 40° C for Home and Office Use
96PSA-A230W24P4-3	AC to DC Adapter, DC 24V 230W, -20 ~ 60° C
1702002600	Power cable 3-pin 183cm, USA type
1702002605	Power cable 3-pin 183cm, EU type
1702031801	Power cable 3-pin 183cm, UK type
1700000237	Power cable, 3-Pin 183cm, PSE type

Optional MOS modules for iDoor Expansion

Part Number	Description
MOS-2230-Z1201E	CANBus module, 2-Ch, USB I/F
MOS-2220-X1101E	Parallel LPT module, 1-Ch, USB I/F.
MOS-2220-Z1101E	High Speed Serial COM module, 1-ch, USB I/F
MOS-2120-Z1101E	Giga LAN Ethernet module, 1-Ch, PCIe I/F.
MOS-1120Y-0201E	Isolated RS-232, 2-Ch, DB9, PCIe I/F
MOS-1121Y-0201E	Isolated RS-422/485, 2-Ch, DB9, PCIe I/F
MOS-1120Y-1401E	Non-Isolated RS-232, DB37, 4-Ch, PCIe I/F
MOS-1121Y-1401E	Non-Isolated RS-422/485, DB37, 4-Ch, PCIe I/F
MOS-1130Y-0201E	Isolated CANBus, 2-Ch, DB9, PCIe I/F
MOS-1110Y-0101E	Isolated 16 DI/8 DO, 1-Ch, DB37, PCIe I/F
MOS-2110Z-1201E	USB module, 2-Ch, PCIe I/F
MOS-2120-Z1201	Dual Intel I210 GbE LAN iDoor, 2-Ch, PCIe I/F

*Please noted ARK-3520 can support only 1 iDoor.

Optional Display Module

Part Number	Description
AMO-D002E	DP module

Optional Riser Expansion

Part Number	Description
AMO-R022E	2 x PCIe x 4