ARK-3520L

6th Gen. Intel® Core™ i3/ i5/ i7 Modular Expansion Fanless Box PC

Features

- 6th Gen. Intel® Core™ i3/i5/i7 mobile processor (BGA)
- Triple independent display: VGA + HDMI + Optional Display
- DDR4 SO-DIMM memory support up to 32 GB
- Option 9-36V power module compatible with all-in-one ordering
- Optional modular design for 2.5" hard drive bays : internal /removable (support up to 2 sets)
- Advantech iDoor module compatible
- Advantech EMIO miniPCIe module compatible with all-in-one ordering
- Advantech ARK Plus AMO-3xxx series module compatible

Windows Embedded SUSI API WISE-DeviceOn

Specifications

Processor System	CPU	Intel Core i7-6820EQ	Intel Core i5-6440EQ	Intel Core i3-6100E (support by T-P/N)
	Frequency	2.8 GHz (Quad Core)	2.7 GHz (Quad Core)	2.7 GHz (Dual Core)
	L3 Cache	8 MB	6 MB	3 MB
	Watts	45W	45W	35W
	System Chipset	Intel QM170		
	BIOS	AMI EFI 128Mbit		
Memory	Technology	DDR4 2133 MHz		
	Max. Capacity	32 GB		
	Socket	2 x 260-pin SO-DIMM		
Graphics	Chipset	Intel QM170 Integrated GFX Gen 9		
	Graphic Engine	Direct x 12, OpenGL 4.4 HW Encode: H.265/HEVC, H.264/MPEG-4 AVC, MPEG-2, JPEG/MJPEG and VP8. HW Decode: H.265/HEVC, H.264/MPEG-4 AVC, MPEG-2, VC-1/WMV9, JPEG/MJPEG, VP8 and VP9		
	VGA	1920x1200@ 60Hz		
	HDMI	1 HDMI port, HDMI 1.4b for HD video playback, 3840x2160@30Hz		
	Optional 3rd Display module	DP / HDMI Display Port		
	Triple Display	VGA+HDMI + 3rd display module		
Ethernet	LAN1	10/100/1000 Mbps Intel I219-LM GbE, support Wake On Lan		
	LAN2	10/100/1000 Mbps Intel I210 GbE, support Wake On Lan		
Audio	Interface	Realtek ALC888S, High Definition Audio, Line-out, Mic-in		
Others	Watch dog Timer	255-level timer interval, setup by software		
	TPM	TPM 2.0 (Optional by project support)		
I/O Interface	Serial Port	4 x RS-232 ports, 4 x RS-232/422/485 port with auto flow control; COM 1,2 support 5V/12V power supply (by jumper)		
	USB	6 x USB 3.0 ports; 2 x USB 2.0 ports		
	DIO	16 bit DIO		
	P/S2	1 Port support by cable and bracket (Optional)		
	Parallel Port	D-sub 25pin connector (Optional)		
Expansions	Mini PCIe	2 x Full-size Mini PCIe (1 x support mSATA, 1 x support SIM holder#1)		
	M.2	1 x E key for WiFi module #1		
	i Door	1 set (Optional)		
	ARK Plus	AMO-3501E 3 Slot Riser Card for 2x PCI+1xPCIx4		
Storage	HDD	1 x 2.5" SATAIII HDD Bay with Max Height 15mm, (1 internal 2.5" HDD Bay with one optional removable HDD Bay)		
	mSATA	1 x mSATA socket (Share 1 Mini PCIe)		
Software Support	Microsoft Windows	Windows 10, Windows 8.1, Windows 7		
	Linux	By Project Support		
Power Requirements	Power Type	AT/ATX		
	Power Input Voltage	12V (9-36V as optional)		
	Power Adapter	AC to DC, 150W (Optional)		
Power Consumption (CPU/Memory Only)	Typical	11.4W		
	Max.	68.4W	46.5W	42.75W
Mechanical	Construction	Aluminum housing		
	Mounting	Desk/wall-mounting		
	Dimensions (W x H x D)	220 x 101 x 233 mm (8.66" x 3.98" x 9.17")		
	Weight	4.8 kg (10.58 lb)		
Environment	Operating Temperature	with extended temp peripherals: -20 ~ 60° C with 0.7m/s air flow with HDD: 0 ~ 40° C with 0.7m/s air flow		
	Storage Temperature	-40 ~ 85° C		
	Relative Humidity	95% @ 40° C (non-condensing)		
	Vibration During Operation	With SSD: 3 Grms, IEC 60068-2-64, random, 5 ~ 500 Hz, 1 hr/axis.		
	Shock During Operation	With SSD: 30 G, IEC 60068-2-27, half sine, 11 ms duration		
	EMC	CE/FCC Class B, CCC, BSMI		
	Safety	CB(62368), UL(62368), CCC, BSMI		

#1 SIM holder and M.2 slot are hardware interfaces for wireless communication integration only. System level RF certification is not available.

研伟科技 15323776609

All product specifications are subject to change without notice.

Last updated: 14-Dec-2020

Dimensions

Unit: mm

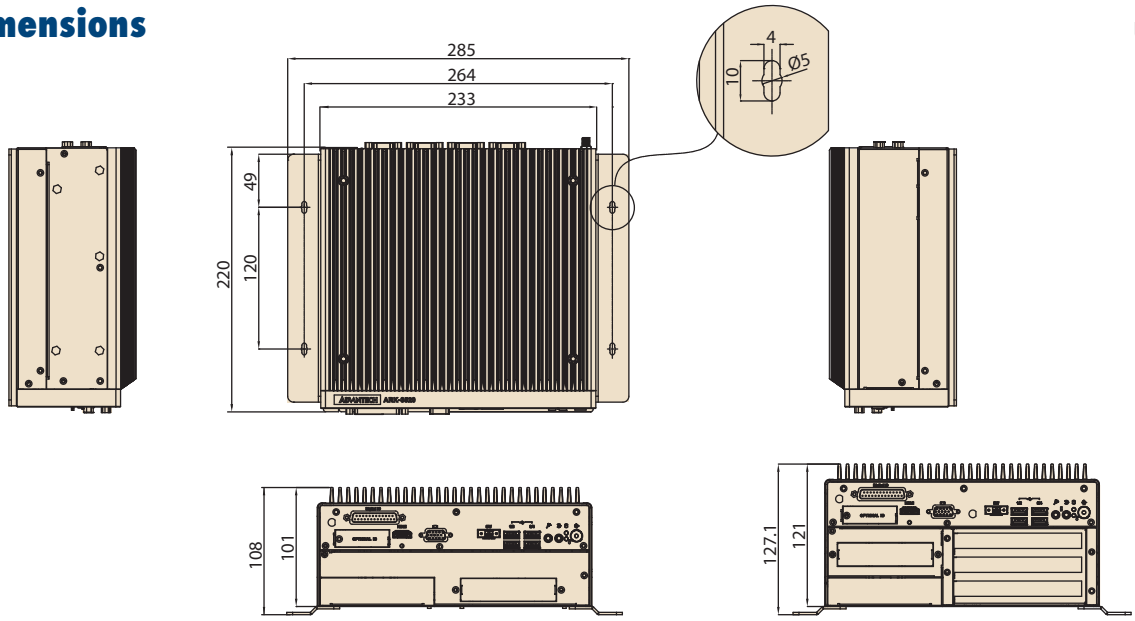

Front Panel External I/O Mechanical Layout/Drawing

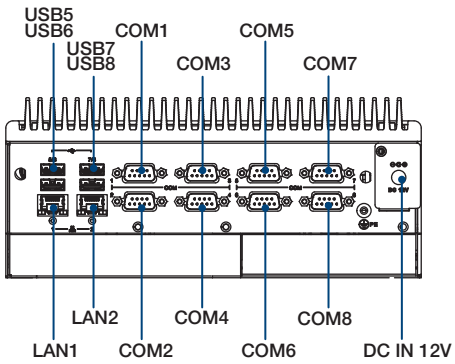

Rear Panel External I/O Mechanical Layout/Drawing

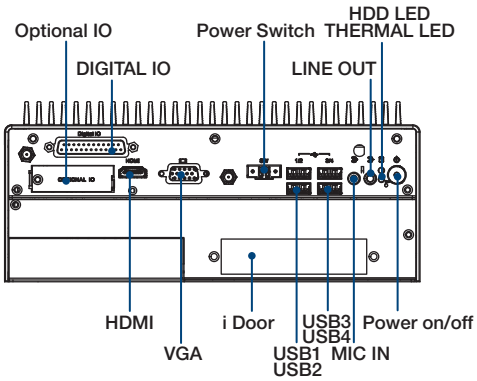

Ordering Information

Part No.	CPU	DDR4	VGA	HDMI	Option 3rd display module	RS-232/ 422/485	RS-232	USB 3.0	USB 2.0	MiniPCIe	SIM	DC input	Expansion
ARK-3520L-U8A1E	i7-6820EQ	up to 32G	1	1	1	4	4	6	2	2	1	12V	Optional
ARK-3520L-U7A1E	i5-6440EQ	up to 32G	1	1	1	4	4	6	2	2	1	12V	Optional

Note: Memory, storage and operating system bundled by request.

* ARK-3520L i3-6100E support by T-PN with MOQ 30pcs

Packing List

Part Number	Description
-	ARK-3520 Unit
-	User Manual (Simplified Chinese)
-	China RoHS
-	2pin power switch terminal block
1960075470N031	2 x mounting bracket

Embedded OS

Part Number	Description
2070014628	WES7E 64bit EN/JP/TC/SC
2070014627	WE8.1 64bit IndustryPro EN/JP/TC/SC
2070014899	Win10 Ent X64 (High End) for i7-6820EQ
2070014898	Win10 Ent X64 (Value) for i5-6440EQ

ARK-3520 Default SKU Option Items

Optional Item for Default SKU

Part Number	Description
XARK-DPS-150AB-15	AC-to-DC Adapter, DC12V 150W
1702002600	Power cable 3-pin 183cm, USA type
1702002605	Power cable 3-pin 183cm, EU type
1702031801	Power cable 3-pin 183cm, UK type
1700000237	Power cable, 3-Pin 183cm, PSE type

Optional MOS modules for iDoor Expansion

Part Number	Description
MOS-2230-Z1201E	CANBus module, 2-Ch, USB I/F
MOS-2220-X1101E	Parallel LPT module, 1-Ch, USB I/F.
MOS-2220-Z1101E	High Speed Com USB module, 2-Ch, PCIe I/F
MOS-2120-Z1101E	Giga LAN Ethernet module, 1-Ch, PCIe I/F.
MOS-1120Y-0201E	Isolated RS-232, 2-Ch, DB9, PCIe I/F
MOS-1121Y-0201E	Isolated RS-422/485, 2-Ch, DB9, PCIe I/F
MOS-1120Y-1401E	Non-Isolated RS-232, DB37, 4-Ch, PCIe I/F
MOS-1121Y-1401E	Non-Isolated RS-422/485, DB37, 4-Ch, PCIe I/F
MOS-1130Y-0201E	Isolated CANBus, 2-Ch, DB9, PCIe I/F
MOS-1110Y-0101E	Isolated 16 DI/8 DO, 1-Ch, DB37, PCIe I/F
MOS-2110Z-1201E	USB module, 2-Ch, PCIe I/F
MOS-2120-Z1201	Dual Intel I210 GbE LAN iDoor, 2-Ch, PCIe I/F

*Please noted ARK-3520 can support only 1 iDoor.

Optional 9-36V DC Power Module

Part Number	Description
AMO-P010E	9-36V DC input power module for ARK-3520
96PSA-A150W19P4-3	AC-to-DC Adapter, DC19V 150W, 0 ~ 40° C (for AMO-P010E)
96PSA-A230W24P4-3	AC to DC adapter, DC 24V 230W, -20 ~ 60° C (For AMO-P010E)
1702002600	Power cable 3-pin 183cm, USA type
1702002605	Power cable 3-pin 183cm, EU type
1702031801	Power cable 3-pin 183cm, UK type

ARK-3520L Optional HDD expansion Kit (Support up to 2 sets)

Part Number	Description
AMK-A0022E	1 x internal HDD Kit (Max Height 15mm)
AMK-A0023E	1 x removable HDD Kit (Max Height 15mm)

Optional Display Module

Part Number	Description
AMO-D002E	DP module
AMO-D003E	HDMI module

ARK Plus Extended Modules

AMO-3501E

3 Slots Riser Card Expansion Module: 2 x PCI +1x PCIex4

Specifications

General	
Add on card support	3 Slot for 2xPCI+1xPCIex4 Max Card size: 110 mm(H) x 180 mm (L) Max Power consumption: 10W for each slot
HDD/SSD	NA
Mechanical	
System Dimension	220 x 121 x 230 mm

Ordering Information

P/N	Description
AMO-3501E	3 Slot Riser Card (2xPCI+1xPCIex4)