ARK-3530L

Intel®Xeon® E3 / Core™ i3/i5/i7 LGA1151 Modular Expansion Fanless Box PC

Features

- Support Intel® Xeon® / 6th & 7th Gen. Core™ i3/i5/i7 processor
- Triple independent display: VGA + HDMI + Optional Display
- DDR4 SO-DIMM memory support up to 32 GB
- Option 9-36V power module compatible with all-in-one ordering
- Optional modular design for 2.5" hard drive bays: internal /removable (support up to 4 sets)
- Advantech iDoor module compatible
- Advantech EMIO miniPCIe module compatible with all-in-one ordering
- Advantech ARK Plus AMO-3xxx series module compatible

Windows Embedded WISE-DeviceOn SUSI API

Specifications

Processor System	CPU	E3-1235L V5	i7-7700/i7-6700	i5-7500/i5-6500	i3-7101E
	Frequency	2.0GHz	3.6GHz/3.4GHz	3.4GHz/3.2GHz	3.9GHz
	L3 Cache	8MB	8MB	6MB	3MB
	TDP	25W	65W	65W	54W
	Chipset	C236			
	BIOS	AMI EFI 128Mbit			
Memory	Technology	DDR4 2133 MHz			
	Max. Capacity	32 GB			
	Socket	2 x 260-pin SO-DIMM			
Graphics	Chipset	Intel® HD Graphics 630			
	Graphic Engine	Direct x 12, OpenGL 4.4 HW Encode: H.265/HEVC, H.264/MPEG-4 AVC, MPEG-2, JPEG/MJPEG and VP8. HW Decode: H.265/HEVC, H.264/MPEG-4 AVC, MPEG-2, VC-1/WMV9, JPEG/MJPEG, VP8 and VP9			
	VGA	1920x1200@ 60Hz			
	HDMI	1 HDMI port, HDMI 2.0 for HD video playback, 3840x2160@30Hz			
	Optional 3rd Display module	DVI-D / DP / HDMI Display Port			
	Triple Display	VGA+HDMI + 3rd display module			
Ethernet	LAN1	10/100/1000 Mbps Intel I219-LM GbE, support Wake On Lan			
	LAN2	10/100/1000 Mbps Intel I210 GbE, support Wake On Lan			
Audio	Interface	Realtek ALC888S, High Definition Audio, Line-out, Mic-in			
Others	Watch dog Timer	255-level timer interval, setup by software			
	TPM	TPM 2.0 (Optional by project support)			
I/O Interface	Serial Port	4 x RS-232/422/485 port with auto flow control; COM 1 support 5V/12V power supply (by jumper)			
	USB	8 x USB 3.0 ports			
	P/S2	1 Port support by cable and bracket (Optional)			
	Optional I/O	16bit DIO or 2 x RS-232 ports			
Expansions	Mini PCIe	2 x Full-size Mini PCIe (2 x support mSATA, 1 x support SIM holder #1)			
	M.2	1 x E key for WiFi module #1			
	i Door	1 set (Optional)			
	ARK Plus	AMO-3505E 2 slot Riser card for 2 x PCI, AMO-3506E 2 slot Riser card for 2 x PCIex8, AMO-3507 1 slot PCIex16+Fan kit			
Storage	HDD	2 x 2.5" SATAIII HDD Bay with Max Height 15mm (support Intel SW RAID up to 4 x 2.5" SATAIII HDD bays by optional 2*AMK-A0028E)			
	mSATA	2 x mSATA socket (Share with Mini PCIe)			
Software Support	Microsoft Windows	Windows 10 (Windows 7 for 6th Gen CPU only)			
	Linux	By Project Support			
Power Requirements	Power Type	AT/ATX			
	Power Input Voltage	12V (9-36V as optional)			
	Power Adapter	AC to DC, 150W (Optional)			
Power Consumption (CPU/Memory Only)	Typical	25.68W			
	Max.	88.92W			
Mechanical	Construction	Aluminum housing			
	Mounting	Desk mounting			
	Dimensions (W x H x D)	105 x 205 x 230 mm (4.13" x 8.07" x 9.06")			
	Weight	5.1Kg			
Environment	Operating Temperature	25W/35W/65W(only 6th Gen) Processor with extended temp peripherals: -20 ~ 60° C with 0.7m/s air flow Under 73W processor with HDD: 0 ~ 40° C with 0.7m/s air flow			
	Storage Temperature	-40 ~ 85° C			
	Relative Humidity	95% @ 40° C (non-condensing)			
	Vibration During Operation	With SSD: 3 Grms, IEC 60068-2-64, random, 5 ~ 500 Hz, 1 hr/axis.			
	Shock During Operation	With SSD: 30 G, IEC 60068-2-27, half sine, 11 ms duration			
	EMC	CE/FCC Class B, CCC, BSMI			
	Safety	CB(62368), UL(62368), CCC, BSMI			

#1 SIM holder and M.2 slot are hardware interfaces for wireless communication integration only. System level RF certification is not available.

研佳科技 15323776600

All product specifications are subject to change without notice.

Dimensions

Unit: mm

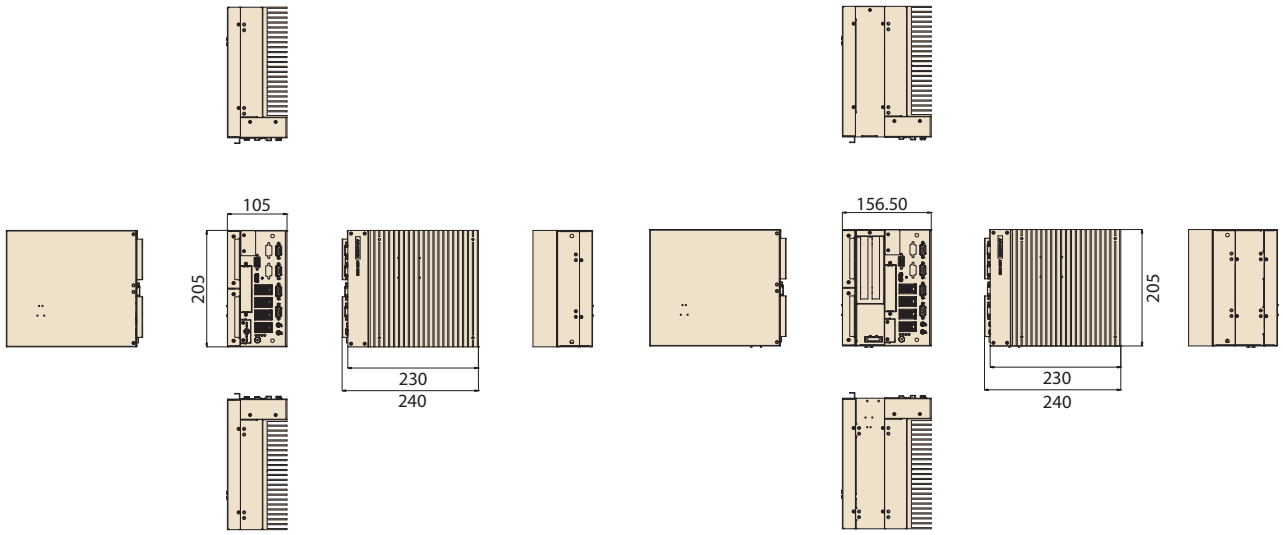

Front Panel External I/O Mechanical Layout/Drawing

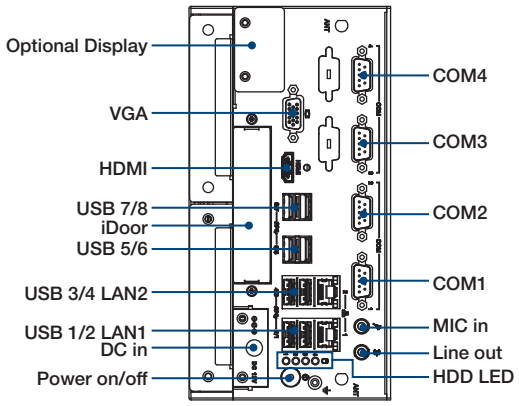

Ordering Information

Part No.	CPU	DDR4	GbE	VGA	HDMI	Option 3rd display module	RS-232/422/485	USB 3.0	MiniPCIe	SIM	M.2	DC Input	Expansion
ARK-3530L-00A1	LGA1151 Socket Type	Up to 32GB	2	1	1	1	4	8	2	1	1	12V	Optional

Note: CPU/Memory/Storage and operating system bundled by request.

Packing List

Part Number	Description
-	ARK-3530L Unit
-	User Manual (Simplified Chinese)
-	China RoHS
-	Desk mounting kit

Embedded OS

Part Number	Description
20706WX9HS0023	WIN10 IoT LTSC 64bit for Xeon and Core i7
20706WX9VS0026	WIN10 IoT LTSC 64bit for Core i3/i5 and Celeron

ARK-3530 Default SKU Option Items

Optional Item for Default SKU

Part Number	Description
XARK-DPS-150AB-15	AC-to-DC Adapter, DC12V 150W
1700028547-01	16bit DIO Cable
1700028548-01	COM5/6 Cable
1702002600	Power cable 3-pin 183cm, USA type
1702002605	Power cable 3-pin 183cm, EU type
1702031801	Power cable 3-pin 183cm, UK type
1700000237	Power cable, 3-Pin 183cm, PSE type

Optional MOS modules for iDoor Expansion

Part Number	Description
MOS-2230-Z1201E	CANBus module, 2-Ch, USB I/F
MOS-2220-X1101E	Parallel LPT module, 1-Ch, USB I/F.
MOS-2220-Z1101E	High Speed Com USB module, 2-Ch, PCIe I/F
MOS-2120-Z1101E	Giga LAN Ethernet module, 1-Ch, PCIe I/F.
MOS-1120Y-0202E	Isolated RS-232, 2-Ch, DB9, PCIe I/F
MOS-1121Y-0202E	Isolated RS-422/485, 2-Ch, DB9, PCIe I/F
MOS-1120Y-1402E	Non-Isolated RS-232, DB37, 4-Ch, PCIe I/F
MOS-1121Y-1402E	Non-Isolated RS-422/485, DB37, 4-Ch, PCIe I/F
MOS-1130Y-0201E	Isolated CANBus, 2-Ch, DB9, PCIe I/F
MOS-1110Y-0101E	Isolated 16 DI/8 DO, 1-Ch, DB37, PCIe I/F
MOS-2110Z-1201E	USB module, 2-Ch, PCIe I/F
MOS-2120-Z1201	Dual Intel I210 GbE LAN iDoor, 2-Ch, PCIe I/F

*Please noted ARK-3530L can support only 1 iDoor.

Optional 9-36V DC Power Module

Part Number	Description
AMO-P010E	9-36V DC input power module for ARK-3530L
96PSA-A150W19P4-3	AC-to-DC Adapter, DC19V 150W, 0 ~ 40° C (for AMO-P010E)
96PSA-A230W24P4-3	AC to DC adapter, DC 24V 230W, -20 ~ 60° C (For AMO-P010E)
1702002600	Power cable 3-pin 183cm, USA type
1702002605	Power cable 3-pin 183cm, EU type
1702031801	Power cable 3-pin 183cm, UK type

ARK-3530L Optional HDD expansion Kit (Support up to 2 sets)

Part Number	Description
AMK-A0028E	1 x internal HDD Kit (Max Height 15mm)

* Choose either AMO-P010E or AMK-A0028E

Optional Display Module

Part Number	Description
AMO-D001E	DVI-D module (1920x1080)
AMO-D002E	DP module (3840x2160@60Hz)
AMO-D003E	HDMI module(3840x2160@30Hz)

ARK Plus Extended Modules

AMO-3505E

2 Slots Riser Card Expansion Module: 2 x PCI

Specifications

General	
Add on card support	2 Slot for 2xPCI Max Card size: 110 mm(H) x 180 mm (L) Max Power consumption: 10W for each slot
HDD/SSD	NA
Mechanical	
System Dimension	155 x 205 x 230 mm

Ordering Information

P/N	Description
AMO-3505E	2 Slot Riser Card (2xPCI)

AMO-3506E

2 Slots Riser Card Expansion Module: 2 x PCIex8

Specifications

General	
Add on card support	2 Slot for 2 x PCIex8 Max Card size: 110 mm(H) x 180 mm (L) Max Power consumption: 10W for each slot
HDD/SSD	NA
Mechanical	
System Dimension	155 x 205 x 230 mm

Ordering Information

P/N	Description
AMO-3506E	2 Slot Riser Card (2 x PCIex8)

AMO-3507E

1 Slot Riser Card Expansion Module: 1 x PCIex16

Specifications

General	
Add on card support	1 Slot for 1 x PCIex16 Max Card size: 110 mm(H) x 180 mm (L) Max Power consumption: 120W with additional power input
HDD/SSD	NA
Mechanical	
System Dimension	155 x 205 x 230 mm

Ordering Information

P/N	Description
AMO-3507	1 Slot Riser Card (1 x PCIex16)
XARK-DPS-150AB-15	150W 12V Adapter for additional expansion card power