ARK-2150L

3rd Generation Intel® Core™ i3/i7 with Dual Independent Display Fanless Box PC

Features

- Intel® Core i7, i3 and Celeron processors + Intel QM77 PCH
- 1 x DDR3/DDR3L, SO-DIMM support up to 8 GB
- DirectX11, OpenGL3.1, OpenCL1.1, dual independent display: VGA + HDMI/ DisplayPort*
- Supports Intel AMT8.0,
- Supports up to 2 x GbE, 2 x USB 3.0, 4 x USB 2.0 and 4 x COMs ports
- Supports 1 x internal mSATA socket and 1 x 2.5" SATA HDD Bay
- Lockable DC jack design
- Supports iManager, SUSIAccess and Embedded Software APIs

Specifications

		ARK-2150L-S4A1E	ARK-2150L-S6A1E	ARK-2150L-S7A1E
Processor System	CPU	Intel Celeron 1047UE	Intel ULV Core i3 3217UE	Intel ULV Core i7 3517UE
	Frequency	Dual Core 1.4 GHz	Dual Core 1.6 GHz	Dual Core 1.7 GHz (Max Turbo Frequency 2.8 GHz)
	L3 Cache	2 MB	3 MB	4 MB
	System Chipset	Intel QM77		
	BIOS	AMI EFI 64Mbit		
Memory	Technology	DDR3 1600MHz, DDR3L 1333 MHz		
	Max. Capacity	8 GB		
	Socket	1 x 204-pin SO-DIMM		
Graphics	Chipset	Intel QM77 Integrated GFX Gen 7		
	Graphic Engine	DirectX11, OpenGL 3.1, and Open CL 11 Hardware decode acceleration: AVC/H.264, M PEG-2, VC-1		
	VGA	Integrated 340.4MHz RAMDAC, Max resolution up to 2048 x 1536 @ 75Hz		
	HDMI/DP*	Supports HDMI 1.4 for HD Video playback (no hotplug support) Max resolution up to 2560 x 1600 @ 60Hz on DisplayPort*, Max resolution up to 1920 x 1200 @ 60Hz on HDMI		
	Dual Display	Yes, VGA + HDMI or VGA + DisplayPort*		
Ethernet	LAN1	10/100/1000 Mbps Intel 82579LM GbE, support Wake On Lan		
	LAN2	10/100/1000 Mbps Intel 82583V GbE, support Wake On Lan		
Audio	Interface	Realtek ALC892, High Definition Audio. Line-out,Mic-in,Line-in		
I/O Interface	Serial Ports	2 x RS-232 ports, 2 x RS-232/422/485 port with auto flow control		
	USB Interface	2 x USB 3.0 ports and 4 x USB 2.0 ports		
Other	Digital I/O	8-bits programmable general purpose input/output		
	Watchdog timer	255 levels timer interval, setup by software		
Expansion	Mini PCIe	2 x Full-size Mini PCIe (One supports mSATA & the other with SIM holder) 1 x Half-size Mini PCIe		
Storage	HDD	Supports one SATA 2.5" SATA HDD Bay (Compatible with 12.5mm height HDD) (Max. Data Transfer Rate 600 MB/s)		
	SSD	Supports one internal mSATA socket		
Software Support	Microsoft Windows	Windows 7, Windows 7 Embedded, XP Professional, XP Embedded		
	Linux	Ubuntu 12.04		
Power Requirement	Power Type	AT/ATX		
	Power Input Voltage	12 V_{DC}, ± 10%		
	Minimum Power Input	12 V, 4 A		
	Power Adapter	AC to DC, DC12 V/5 A, 60 W (Optional)		
Power Consumption	Typical	9.6 Watt (with Intel Core i7 3517UE CPU and 2 GB memory)		
	Max.	24.96 Watt (with Intel Core i7 3517UE CPU and 2 GB memory)		
Mechanical	Construction	Aluminum housing		
	Mounting	Din-Rail mounting, Desk/wall-mounting, VESA mounting		
	Dimensions (W x H x D)	264.5 x 75.1 x 133.0 mm (10.41" x 2.96" x 5.24")		
	Weight	2.3 kg (5.07 lb)		
Environment	Operating Temperature	With extended temperature peripherals: -20 ~ 60° C (-4 ~ 140° F) with 0.7m/s air flow With 2.5-inch hard disk 0 ~ 45° C (32 ~ 112° F) with 0.7m/s air flow		
	Storage Temperature	-40 ~ 85° C (-40 ~ 185° F)		
	Relative Humidity	95% @ 40° C (non-condensing)		
	Vibration During Operation	With SSD: 5 Grms, IEC 60068-2-64, random, 5 ~ 500 Hz, 1 hr/axis.		
	Shock During Operation	With SSD: 50 G, IEC 60068-2-27, half sine, 11 ms duration		
	EMC	CE/FCC Class A, CCC, BSMI		
	Safety Certifications	UL, CCC, BSMI		

*DisplayPort function is supported by project (no hotplug support)

All product specifications are subject to change without notice

Dimensions

Unit: mm

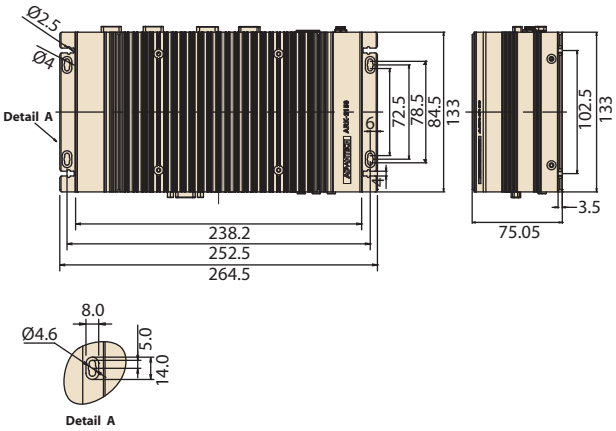

DIN Rail

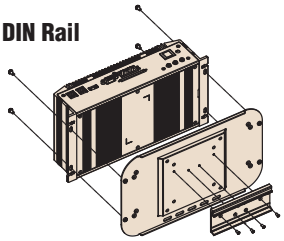

VESA mount

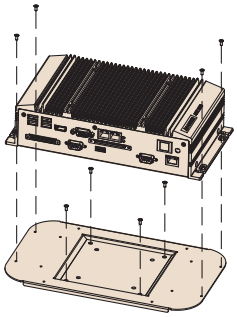

Wall mount

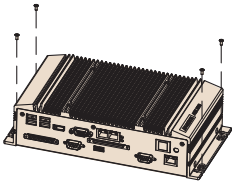

Front Panel External I/O Mechanical Layout/Drawing

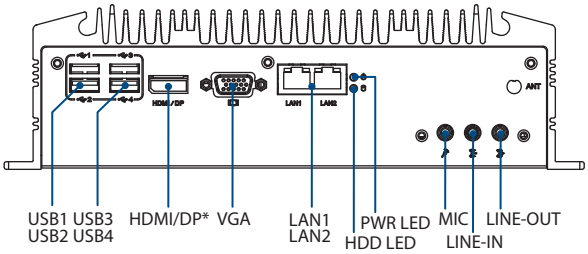

Rear Panel External I/O Mechanical Layout/Drawing

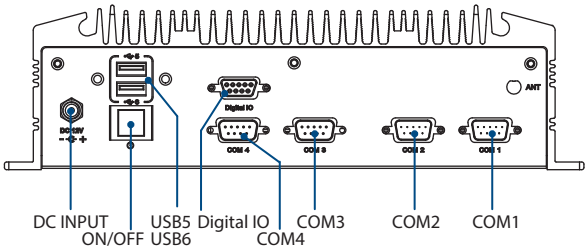

Ordering Information

Part No.	CPU	RAM	VGA	HDMI/ DP*	GbE	USB 3.0	USB 2.0	RS-232	RS-232/ 422/485	DIO	Half-size Mini PCIe	Full-size Mini PCIe	SIM	2.5" SATAII HDD Bay	Power Input	Operation Temp.	OS
ARK-2150L-S4A1E	Intel Celeron 1.4GHz 1047UE	upto 8GB	Yes	Yes	2	2	4	2	2	8-bits	1	2	1	1	DC 12V Lockable DC Jack	-20 ~ 60° C	-
ARK-2150L-S6A1E	Intel Core i3 ULV 1.6GHz 3217UE	upto 8GB	Yes	Yes	2	2	4	2	2	8-bits	1	2	1	1	DC 12V Lockable DC Jack	-20 ~ 60° C	-
ARK-2150L-S7A1E	Intel Core i7 ULV 1.7GHz 3517UE	upto 8GB	Yes	Yes	2	2	4	2	2	8-bits	1	2	1	1	DC 12V Lockable DC Jack	-20 ~ 60° C	-
ARK-2150LS-S7A1E	Intel Core i7 ULV 1.7GHz 3517UE	4GB built in	Yes	Yes	2	2	4	2	2	8-bits	1	2	1	500GB HDD built in	DC 12V 1757004339-01 bundled	0 ~ 45° C	WES7E 64 bit built-in ENG/JP/ TC/SC

Note: Memory, storage and operating system bundled by request.
*DP function is supported by project.

Packing List

Part Number	Description
-	1 x ARK-2150 Unit
-	1 x Utility CD
-	1 x User Manual (Simplified Chinese)
-	1 x China RoHS

Embedded OS

Part Number	Description
2070011831	Image WES7E SP1 x32 ENG/JP/TC/SC
2070011830	Image WES2009 V4.2 multi 24 language

Optional Items

Part Number	Description
96PSA-A60W12W6	AC to DC Adaptor, DC 12V/5A 60W, with lock
1702002600	Power cable 3-pin 180cm, USA type
1702031801	Power cable 3-pin 180cm, UK type
1702002605	Power cable 3-pin 180cm, EU type
1700000237	Power cable 3-pin 180cm, with PSE
AMK-V004E	VESA mounting kit
AMK-R004E	DIN-rail mounting kit