ARK-2150F

3rd Generation Intel® Core™ i7 with 4 x GbE, Isolated DIO & wide range power Fanless Box PC

Features

- Intel® Core™ i7 processors + Intel QM77 PCH
- 1 x DDR3/DDR3L SO-DIMM, support up to 8 GB
- DirectX11, OpenGL3.1, OpenCL1.1
- Supports Intel AMT8.0
- Supports 4 x Intel GbE
- Support 4ch digital input and 4ch digital output with 2.5KV isolation
- Supports 3 x USB 3.0, 3 x USB 2.0, 4 COMs ports
- Supports 1 x internal mSATA socket and 1 x 2.5" SATA HDD Bay
- 12~24V wide range DC input with lockable connector
- Supports iManager, SUSIAccess and Embedded Software APIs

Specifications

		ARK-2150F-S7A1E
Processor System	CPU	Intel ULV Core i7 3517UE
	Frequency	Dual Core 1.7 GHz (Max Turbo Frequency 2.8 GHz)
	L3 Cache	4 MB
	System Chipset	Intel QM77
	BIOS	AMI EFI 64Mbit
Memory	Technology	DDR3 1600MHz, DDR3L 1333 MHz
	Max. Capacity	8 GB
	Socket	1 x 204-pin SO-DIMM
Graphics	Chipset	Intel QM77 Integrated GFX Gen 7
	Graphic Engine	DirectX11, OpenGL 3.1, and Open CL 11 Hardware decode acceleration: AVC/H.264, M PEG-2, VC-1
	VGA	Integrated 340.4MHz RAMDAC, Max resolution up to 2048 x 1536 @ 75Hz
	HDMI/DP*	Supports HDMI 1.4 for HD Video playback (no hotplug support) Max resolution up to 2560 x 1600 @ 60Hz on DisplayPort*, Max resolution up to 1920 x 1200 @ 60Hz on HDMI
	DVI-D	Max resolution up to 1920 x 1200
	Dual independent display	Yes, VGA+HDMI/DisplayPort*, VGA+HDMI/DVI-D, VGA+DVI-D, HDMI/DisplayPort*+DVI-D
Ethernet	LAN1	10/100/1000 Mbps Intel 82579LM GbE, support Wake On Lan
	LAN2/LAN3/LAN4	10/100/1000 Mbps Intel 82583V GbE
Audio	Interface	Realtek ALC892, High Definition Audio, Line-out,Mic-in,Line-in
I/O Interface	Serial Ports	4 x RS-232/422/485 port with auto flow control
	USB Interface	3 x USB 3.0 ports and 3 x USB 2.0 ports
Other	Digital I/O	4ch digital input and 4ch digital output with 2.5KV isolation
	Watchdog timer	255 levels timer interval, setup by software
Expansion	Mini PCIe	2 x Full-size Mini PCIe (Supports mSATA & SIM) 1 x Half-size Mini PCIe
Storage	HDD	Supports one SATA 2.5" HDD Bay (Compatible with 12.5mm height HDD) (Max. Data Transfer Rate 600 MB/s)
	SSD	Supports one internal mSATA socket
Software Support	Microsoft Windows	Windows 7, Windows 7 Embedded, XP Professional, XP Embedded
	Linux	Ubuntu 12.04
Power Requirement	Power Type	AT/ATX
	Power Input Voltage	12 ~ 24 V_{DC}
	Minimum Power Input	12 V ~ 24 V, 4.0 A ~ 2 A
	Power Adapter	AC to DC, DC 19V/3.42A 65W (Optional)
Power Consumption	Typical	10.3 Watt
	Max.	25.7 Watt
Mechanical	Construction	Aluminum housing
	Mounting	Din-Rail mounting, Desk/wall-mounting, VESA mounting
	Dimensions (W x H x D)	264.5 x 75.1 x 133.0 mm (10.41" x 2.96" x 5.24")
	Weight	2.8kg (6.17lb)
Environment	Operating Temperature	With extended temperature peripherals: -20 ~ 60° C (-4 ~ 140° F) with 0.7m/s air flow With 2.5-inch hard disk 0 ~ 45° C (32 ~ 112° F) with 0.7m/s air flow
	Storage Temperature	-40 ~ 85° C (-40 ~ 185° F)
	Relative Humidity	95% @ 40° C (non-condensing)
	Vibration During Operation	With SSD: 5 Grms, IEC 60068-2-64, random, 5 ~ 500 Hz, 1 hr/axis.
	Shock During Operation	With SSD: 50 G, IEC 60068-2-27, half sine, 11 ms duration
	EMC	CE/FCC Class A, CCC, BSMI
	Safety Certifications	UL, CCC, BSMI

*DisplayPort function is supported by project (no hotplug support).

研伟科技 15323776608

All product specifications are subject to change without notice

Dimensions

Unit: mm

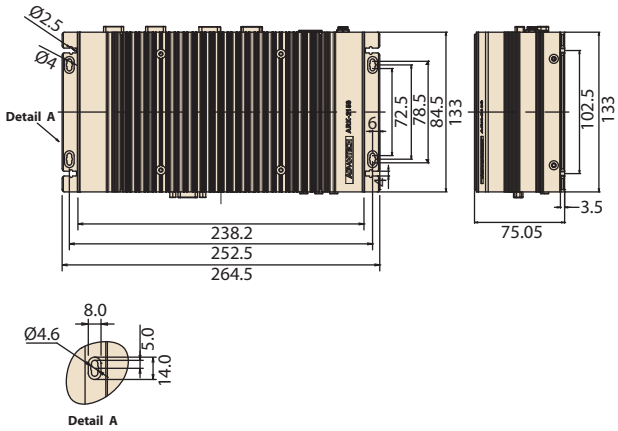

VESA mount

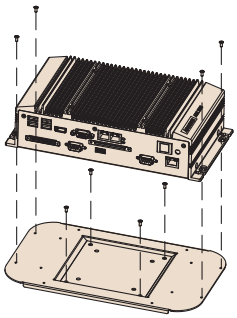

Wall mount

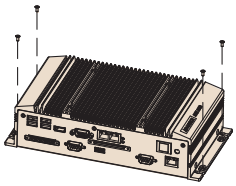

DIN Rail

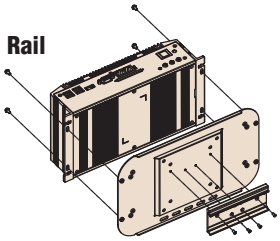

Front Panel External I/O Mechanical Layout/Drawing

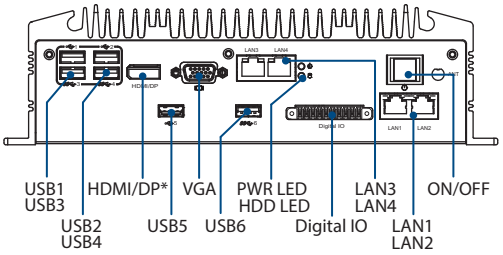

Rear Panel External I/O Mechanical Layout/Drawing

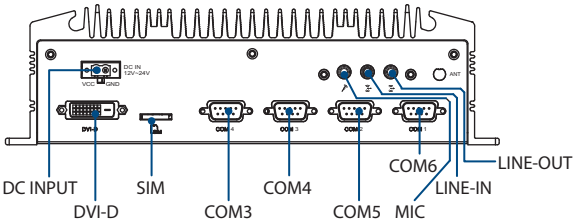

Ordering Information

Part No.	CPU	VGA	HDMI/ DP*	DVI-D	GbE	USB 3.0	USB 2.0	RS-232/ 422/485	DIO	Audio	Half-size Mini PCIe	Full-size Mini PCIe	SIM	2.5" SATAII HDD Bay	Power Input	Operation Temp.
ARK-2150F-S7A1E	Intel Core i7 ULV 1.7GHz 3517UE	Yes	Yes	Yes	4	3	3	4	4ch DI and 4ch DO with 2.5KV isolation	Line-out, Line-in, MIC	1	2	1	1	DC 12-24V 2-pin phoenix head	-20 ~ 60° C

Note: Memory, storage and operating system bundled by request.
*DP is supported by project.

Packing List

Part Number	Description
-	1 x ARK-2150 Unit
-	1 x Utility CD
-	1 x User Manual (Simplified Chinese)
-	1 x China RoHS
1700009001	1 x 2-pin Phoenix to DC-Jack power cable

Embedded OS

Part Number	Description
2070011831	Image WES7E SP1 x32 ENG/JP/TC/SC
2070011830	Image WES2009 V4.2 multi 24 language

Optional Items

Part Number	Description
96PSA-A65W19P2-1	AC-to-DC Adapter, DC19 V/3.42 A 65 W, with Phoenix Power Plug, 0 ~ 40° C for Home and Office Use
XARK-9NA0904747	AC-to-DC Adapter, DC 19V/4.73A 90W, -20 ~ +70° C
1700001524	Power cable 3-pin 180cm, USA type
170203183C	Power cable 3-pin 180cm, EU type
170203180A	Power cable 3-pin 180cm, UK type
1700008921	Power cable 3-pin 180 cm, PSE type
AMK-V004E	VESA mounting kit
AMK-R004E	DIN-rail mounting kit