ARK-2250L A2

Intel 6th/7th Generation Core™ i3/i5/i7 Modular Fanless Box PC

Features

- Intel 6th/7th Gen Intel® Core™ U-series (i3/i5/i7)
- VGA and HDMI dual display, option 3rd display for triple display
- 12V lockable DC jack power input
- 9-36V optional power module compatible with all-in-one ordering
- -20 ~ 60 °C extend temperature operating
- 2 x full size mPCIe expansion for WIFI/Cellular communication module
- 1 x full size mSATA and 1 x 2.5" SATA storage device
- Advantech iDoor module compatible
- Advantech ARK Plus module support by dual layer configurations

Windows Embedded **WISE-DeviceOn** **SUSI API**

Specifications

Processor System	CPU	Intel Core i7 6600U	Intel Core i3 6100U	Intel Core i7 7600U	Intel Core i3 7100U
	Base Frequency	2.6 GHz (Dual Core)	2.3 GHz (Dual Core)	2.8G (Dual Core)	2.4G (Dual Core)
	L3 Cache	4MB	3MB	4MB	3MB
	BIOS	AMI UEFI 128 Mbit			
Memory	Technology	DDR4 2133 MHz			
	Max. Capacity	16 GB			
	Socket	1 x 260-pin SO-DIMM			
Graphics	Controller	Intel HD Graphics 520			
	Graphic Engine	DirectX 11.3, OpenGL 4.4, and OpenCL 2.1 Full AVC/VC1/MPEG2 HW Decode			
	VGA	Up to 1920 x 1200 @ 60Hz (No hotplug support)			
	HDMI	HDMI 1.4a for HD video playback, 4096 x 2160 @ 24Hz			
	Dual Display	Yes, VGA + HDMI			
	Opional display Module	HDMI, DP			
	Triple Display	VGA+HDMI+Optional display module			
Ethernet	LAN1	10/100/1000 Mbps Intel i219 GbE, support Wake On Lan			
	LAN2	10/100/1000 Mbps Intel i210 GbE, support Wake On Lan			
Audio	Interface	Realtek ALC888S, High Definition Audio. Line-out, Mic-in			
IO Interface	Serial Ports	4 x RS-232/422/485 port with auto flow control			
	USB Interface	4 x USB 3.0, 2 x USB 2.0			
	DIO	8 bit			
Other	Watchdog timer	255 levels timer interval, setup by software			
Expansion	Mini PCIe	2 x full size Mini PCIe (CN14 with SIM holder) #1			
	iDoor	1 set (option)			
Storage	HDD	Supports one SATA 2.5" HDD Bay (Compatible with 12.5mm height HDD) (Max. Data Transfer Rate 300 MB/s)			
	SSD	1 x full size mSATA socket (CN15, shared with mPCIe)			
Software Support	Microsoft Windows	Windows 10, Windows 8.1, WES7, Windows 7			
	Linux	Support by project			
Power Requirement	Power Type	ATX			
	Power Input Voltage	$12V_{DC}$ (9-36V as option)			
	Minimum Power Input	12 V, 5 A			
	Power Adapter	AC to DC, DC12V/5A, 60W (Option)			
Power Consumption	Typical	7.96 Watt	6.92 Watt		
	Max.	43.28 Watt	41.72 Watt		
Mechanical	Construction	Aluminum housing			
	Mounting	Din-Rail mounting, Desk/wall-mounting, VESA mounting			
	Dimensions (W x H x D)	260 x 54 x 140.2 mm (10.24" x 2.13" x 5.52")			
	Weight	2.3 kg (5.07 lb)			
Environment	Operating Temperature	With extended temperature peripherals: -20 ~ 60 °C (-4 ~ 140 °F) with 0.7m/s air flow With 2.5-inch hard disk 0 ~ 40 °C (32 ~ 104 °F) with 0.7m/s air flow			
	Storage Temperature	- 40 ~ 85 °C (-40 ~ 185 °F)			
	Relative Humidity	95% @ 40 °C (non-condensing)			
	Vibration During Operation	With SSD: 3 Grms, IEC 60068-2-64, random, 5 ~ 500 Hz, 1 hr/axis.			
	Shock During Operation	With SSD: 30 G, IEC 60068-2-27, half sine, 11 ms duration			
	EMC	CE/FCC Class B, CCC, BSMI			
	Safety Certifications	UL, CCC, BSMI			

#1 SIM holder is the hardware interfaces for wireless communication integration only. System level RF certification is not available.

研佳科技 15323776600

All product specifications are subject to change without notice.

Dimensions

Unit: mm

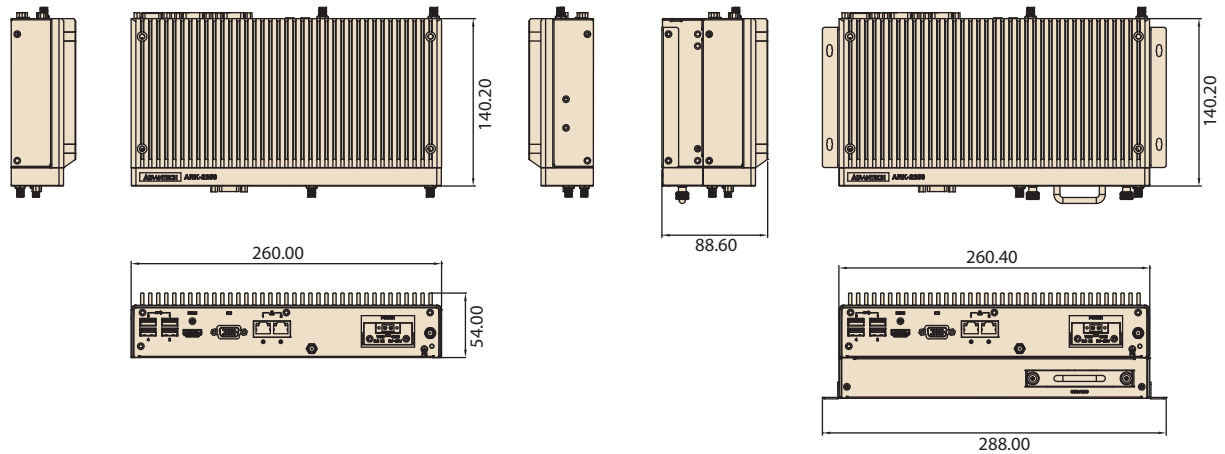

Front Panel External I/O Mechanical Layout/Drawing

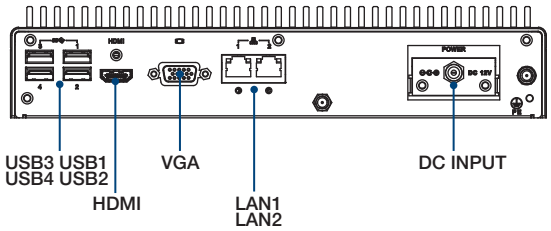

*Power Input module by option

Rear Panel External I/O Mechanical Layout/Drawing

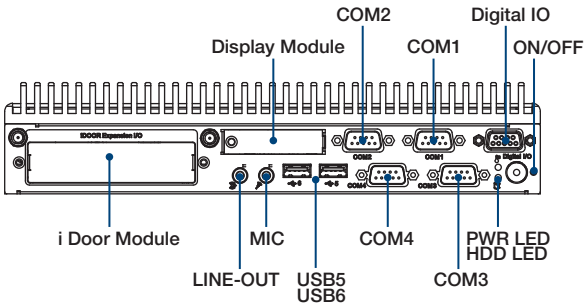

Ordering Information

Part No.	CPU	VGA	HDMI	GbE	USB 2.0	USB 3.0	RS-232/ 422/485	DIO	Audio	Full-size MiniPCIe	SIM	mSATA	2.5" SATA II HDD Bay	Power Input	Operating Temp.
ARK-2250L-U6A2	Intel Core i7-6600U	Yes	Yes	2	2	4	4	1	Lin-out, Mic-in	2	1	1	1	12 V_{DC}	-20 ~ 60 °C
ARK-2250L-U3A2	Intel Core i3-6100U	Yes	Yes	2	2	4	4	1	Lin-out, Mic-in	2	1	1	1	12 V_{DC}	-20 ~ 60 °C
ARK-2250L-U8A2	Intel Core i7-7600U	Yes	Yes	2	2	4	4	1	Lin-out, Mic-in	2	1	1	1	12 V_{DC}	-20 ~ 60 °C
ARK-2250L-U4A2	Intel Core i3-7100U	Yes	Yes	2	2	4	4	1	Lin-out, Mic-in	2	1	1	1	12 V_{DC}	-20 ~ 60 °C
ARK-2250L-U6A3	Intel Core i7-6600U	Yes	Yes	2	2	4	4	1	N/A	2	1	1	1	12 V_{DC}	-20 ~ 60 °C
ARK-2250L-U3A3	Intel Core i3-6100U	Yes	Yes	2	2	4	4	1	N/A	2	1	1	1	12 V_{DC}	-20 ~ 60 °C

Note: Memory, storage and operating system bundled by request.
* i5-6300U/i5-7300U are supported by T-P/N with MOQ 30 pcs.

Packing List

Part Number	Description
-	1 x ARK-2250L Unit
-	1 x User Manual (Simplified Chinese)
-	1 x China RoHS
-	2 x Wall mounting bracket
-	2 x LAN Clip

ARK-2250 Expansion Option Items

Optional Embedded OS

Part Number	Description
20706WE7PM0023	WES7P 64bit 10MUI (only for ARK-2250L-U6A2 and ARK-2250L-U3A2)
2070014959	Win Emb 8.1_64bit US/DE/ES/FR/JP/KR/LT/RU/CN/TW (only for ARK-2250L-U6A2 and ARK-2250L-U3A2)
20706WX9HS0092	WIN10 IoT 2019 64bit_EN for ARK-2250L-U6A2
20706WX9VS0096	WIN10 IoT 2019 64bit_EN for ARK-2250L-U3A2
20706WX9HS0117	WIN10 IoT 64bit_EN for ARK-2250L-U8A2
20706WX9VS0121	WIN10 IoT 64bit_EN for ARK-2250L-U4A2

Note: Default BIOS is for 64bit OS support only. 32bit OS will need to update BIOS

Optional Item for Default SKU

Part Number	Description
96PSA-A60W12W7-3	AC-to-DC Adapter, DC12V/5A 60W
1702002600	Power cable 3-pin 183cm, USA type
1702002605	Power cable 3-pin 183cm, EU type
1702031801	Power cable 3-pin 183cm, UK type
AMK-V019E	VESA mount kits
AMK-R005E	DIN Rail mount kits

Optional MOS modules for iDoor Expansion

Part Number	Description
MOS-2230-Z1201E	CANBus module, 2-Ch, USB Interface
MOS-2220-X1101E	Parallel LPT module, 1-Ch, USB Interface
MOS-2110Z-1201E	USB module, 2-Ch, PCIe Interface
MOS-2120-Z1101E	Giga LAN Ethernet module, 1-Ch, PCIe Interface
MOS-1120Y-0202E	Isolated RS-232, 2-Ch, DB9, PCIe Interface
MOS-1121Y-0202E	Isolated RS-422/485, 2-Ch, DB9, PCIe Interface
MOS-1120Y-1402E	Non-Isolated RS-232, DB37, 4-Ch, PCIe Interface
MOS-1121Y-1402E	Non-Isolated RS-422/485, DB37, 4-Ch, PCIe Interface
MOS-1130Y-0201E	Isolated CANBus, 2-Ch, DB9, PCIe Interface
MOS-1110Y-0101E	Isolated 16 DI/8 DO, 1-Ch, DB37, PCIe Interface
MOS-2120-Z1201	GigaLAN Ethernet module, mPCIe, RJ45 2-Ch, PCIe I/F

* When configuring with MOS-2120-Z1201, please update BIOS with Advantech part number 1420053152.

Optional 9-36V DC Power module

Part Number	Description
MIOE-PWR2-00A1E	9-36V DC input power module
96PSA-A65W19P2-1	AC-to-DC Adapter, DC19V/3.42A 65W (for MIOe-PWR2)
1700001524	Power cable 3-pin 183cm, USA type (for MIOe-PWR2)
170203183C	Power cable 3-pin 183cm, EU type (for MIOe-PWR2)
170203180A	Power cable 3-pin 183cm, UK type (for MIOe-PWR2)

Optional Display Module

Part Number	Description
AMO-D002E	DP module
AMO-D003E	HDMI module

ARK-2250 Dual Layer Expansion Option Items

Optional modules for ARK Plus Expansion

Part Number	Description
AMO-2201E (2nd Layer)	4 x RS232/422/485 + removable 2.5" drive
AMO-2202E (2nd Layer)	4-port PoE with $12V_{DC}$/10A 120W adapter
AMO-2203E (2nd Layer)	2-Port isolated CAN-Bus
AMO-2204E (2nd Layer)	3-port GbE + iDoor (2nd iDoor support USB I/F only)

ARK Plus Extended Modules

AMO-2201E

4 x RS232/422/485 + removable 2.5" drive bay

Specifications

General	
Bus interface	MIOe
Ports	4 x RS232/422/485 (set up by jumper)
Others	Removable 2.5" drive bay
Mechanical	
Dimension	260 x 34.6 x 140.2 mm (10.24" x 1.36" x 5.52")
Environment	
Operating Temp	0 ~ 40 °C

Ordering Information

P/N	Description
AMO-2201E	4 x RS232/422/485 + removable 2.5" drive bay

AMO-2202E

4 x 10/100/1000Base T(X) PoE

Specifications

General	
Bus interface	MIOe
Ports	4 x RJ45 10/100/1000 Mbps PoE ports
Power consumption	Each port 15W, Max 60W
Compatibility	IEEE 802.3, IEEE 802.3u, IEEE802.3ab, IEEE802.3x,IEEE802.3af Powered Device (PD) auto detection and classification Supports IEEE 802.3u Auto-Negotiation
Power	
Input	12 V_{DC} power input (Change System Power input Cable)
Output PoE Power	15W at 48 V_{DC} per PoE port
Mechanical	
Dimension	260 x 34.6 x 140.2 mm (10.24" x 1.36" x 5.52")
Environment	
Operating Temp	0 ~ 40 °C

Ordering Information

P/N	Description
AMO-2202E	4 x 10/100/1000Base T(X) PoE

AMO-2203E

2-Port isolated CAN-Bus

Specifications

General	
Bus interface	MIOe
Ports	2 x DB9 isolated CAN-Bus
Communications	
Signal Support	CAN_H, CAN_L
Protocol	CAN 2.0 A/B
Data Transfer Rate	Programmable up to 1Mbps
CAN Frequency	16MHz
Protection	
Isolation Protection	2,500 V_{DC}
Mechanical	
Dimension	260 x 34.6 x 140.2 mm (10.24" x 1.36" x 5.52")
Environment	
Operating Temp	0 ~ 40 °C

Ordering Information

P/N	Description
AMO-2203E	2-Port isolated CAN-Bus

AMO-2204E

3-Port GbE + iDoor

Specifications

General	
Bus interface	MIOe
Ports	3 x RJ45 10/100/1000 Mbps ports
Chipset	Intel 82583V Gigabit Ethernet Controller
Other	1 x iDoor
Mechanical	
Dimension	260 x 34.6 x 140.2 mm (10.24" x 1.36" x 5.52")
Environment	
Operating Temp	0 ~ 40 °C

Ordering Information

P/N	Description
AMO-2204E	3-Port GbE + iDoor

* 2nd iDoor supported. Please refer to "Optional MOS modules for iDoor Expansion