ARK-2232L A2

Intel® Atom® E3940 SoC Modular Fanless Box PC

*Dual Layer model is ARK-2232 with ARK Plus module

Windows Embedded WISE-DeviceOn SUSI API

Features

- Intel® Atom® E3940 Quad Core SoC
- Dual independent displays with one 4K HDMI and one VGA
- 12V lockable DC jack power input
- 9-36V power module compatible with all-in-one ordering
- -20 ~ 60 °C extend operating temperature
- Mini PCIe expansion with SIM holder for communication module
- M.2 NGFF 2230 E Key for WiFi communication module
- mSATA and 1 x 2.5" SATA storage device
- Advantech iDoor module compatible
- Advantech EMIO miniPCIe module compatible with all-in-one ordering
- Advantech MIOe module compatible with all-in-one ordering (2 Layers)

Specifications

		ARK-2232L-S6A2
Processor System	CPU	Intel Atom E3940 Quad Core SoC
	Frequency	1.6 GHz, turbo burst 1.8 GHz
	L2 Cache	2MB
	BIOS	AMI EFI 64-bit
Memory	Technology	DDR3L 1866 MHz
	Max. Capacity	8 GB
	Socket	1 x 204-pin SO-DIMM
Graphics	Chipset	Intel HD Graphics 500
	Graphic Engine	4K Codec Decode& Encode for H.264, MPEG2, MVC, VC-1, WMV9, H.265 / HEVC, VP8, JPEG / MJPEG
	VGA	Up to 1920 x 1200 @ 60Hz
	HDMI	HDMI 1.4b for HD video playback, 3840 x 2160 at 30Hz
	Dual Display	Yes, VGA + HDMI
Ethernet	LAN1	10/100/1000 Mbps Intel i210-IT GbE, supports Wake On LAN
	LAN2	10/100/1000 Mbps Intel i210-IT GbE, supports Wake On LAN
Audio	Interface	Realtek ALC888S, High Definition Audio. Line-out, Mic-in
IO Interface	Serial Ports	2 x RS-232 ports, 2 x RS-232/422/485 port with auto flow control
	Digital I/O	8-bit programmable general purpose input/output
	USB Interface	2 x USB 3.0, 4 x USB 2.0
	TPM	TPM 2.0 power by Infineon SLB9665TT2.0 (by project support)
Other	Watchdog timer	255 levels timer interval, setup by software
Expansion	Mini PCIe	1 x full size Mini PCIe with SIM holder (PCIex1, USB 2.0, UIM, SATA III) #1
	M.2	1 x M.2 2230 E Key (PCIex1, UBS 2.0) #1
Storage	HDD	Supports one SATA 2.5" HDD Bay (Compatible with 12.5mm height HDD) (Max. Data Transfer Rate 300 MB/s)
	mSATA	1 x full size mSATA socket (share with miniPCIe)
Software Support	Microsoft Windows	Windows 10
	Linux	Support by project
Power Requirements	Power Type	AT/ATX
	Power Input Voltage	$12V_{DC}$ (9-36V as option)
	Minimum Power Input	12 V, 5 A
	Power Adapter	AC to DC, DC12V/5A, 60W (Optional)
Power Consumption (CPU/Memory only)	Typical	7.79W
	Max.	17.48W
Mechanical	Construction	Aluminum housing
	Mounting	Desk/Wall-mounting (Default), Din-Rail mounting (Optional kit), VESA mounting (Optional kit)
	Dimensions (W x H x D)	260 x 44 x 140.2 mm (10.24" x 1.73" x 5.52")
	Weight	Net Weight: 1.9kg (4.19 lbs); Gross Weight: 2.9kg (6.39 lbs)
Environment	Operating Temperature	With extended temperature peripherals: -20 ~ 60 °C (-4 ~ 140 °F) with 0.7m/s air flow With 2.5-inch hard disk 0 ~ 40 °C (32 ~ 104 °F) with 0.7m/s air flow
	Storage Temperature	- 40 ~ 85 °C (-40 ~ 185 °F)
	Relative Humidity	95% @ 40 °C (non-condensing)
	Vibration During Operation	With SSD: 3 Grms, IEC 60068-2-64, random, 5 ~ 500 Hz, 1 hr/axis.
	Shock During Operation	With SSD: 30 G, IEC 60068-2-27, half sine, 11 ms duration
	EMC	CE/FCC Class B, CCC, BSMI
	Safety Certifications	UL, CB, CCC, BSMI

#1 SIM holder and M.2 slot are hardware interfaces for wireless communication integration only. System level RF certification is not available.

研伟科技 15323776600

All product specifications are subject to change without notice.

Last updated: 15-Dec-2020

Dimensions

Unit: mm

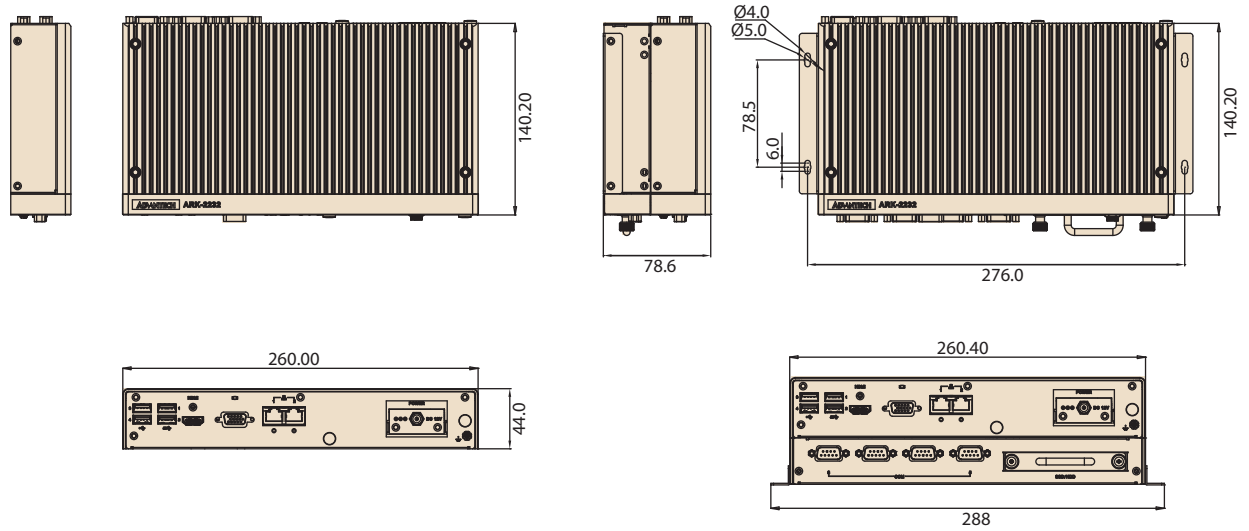

Front Panel External I/O Mechanical Layout/Drawing

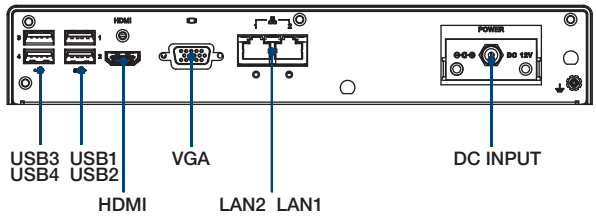

*Power Input module by option

Rear Panel External I/O Mechanical Layout/Drawing

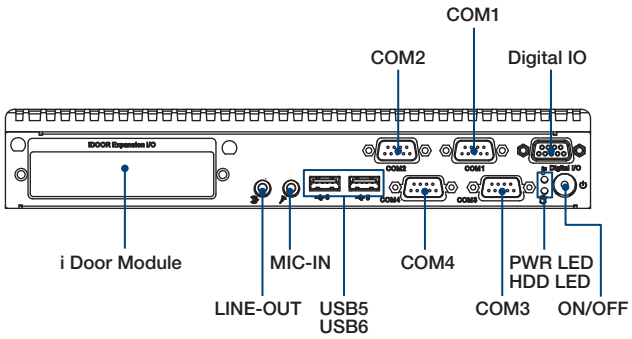

Ordering Information

Part No.	CPU	VGA	HDMI	GbE	USB 2.0	USB 3.0	RS-232	RS-232/422/485	Audio	Full-size MinePCIe	M.2	SIM	mSATA	2.5" SATA III HDD Bay	Power Input	Operating Temp.
ARK-2232L-S6A2	Intel Atom E3940 1.6 GHz SoC	Yes	Yes	2	4	2	2	2	Lin-out, MIC-IN	1	1	1	1	1	12 V_{DC}	-20 ~ 60 °C

Note: Memory, storage and operating system bundled by request.

Packing List

Part Number	Description
-	1 x ARK-2232L Unit
-	1 x User Manual (Simplified Chinese)
-	1 x China RoHS
-	Wall mounting kit

ARK-2232 Default SKU Option Items

Optional Embedded OS

Part Number	Description
20706WX9ES0096	W10 19EL ARK-2232L 64b 1809 ENU

Optional Item for Default SKU

Part Number	Description
96PSA-A60W12W7-3	AC-to-DC Adapter, DC12V/5A 60W
1702002600	Power cable 3-pin 183cm, USA type
1702002605	Power cable 3-pin 183cm, EU type
1702031801	Power cable 3-pin 183cm, UK type
AMK-R005E	DIN Rail mount kits
AMK-V019E	VESA mount kits

ARK-2232 Single Layer Expansion Option Items

Optional MOS Modules for iDoor Expansion

Part Number	Description
MOS-2220-X1101E	Parallel LPT module, 1-Ch, USB Interface
MOS-2110Z-1201E	USB module, 2-Ch, PCIe Interface
MOS-2120-Z1101E	Giga LAN Ethernet module, 1-Ch, PCIe Interface
MOS-1120Y-0202E	Isolated RS-232, 2-Ch, DB9, PCIe Interface
MOS-1121Y-0202E	Isolated RS-422/485, 2-Ch, DB9, PCIe Interface
MOS-1120Y-1402E	Non-Isolated RS-232, DB37 to 4-ch DB9, PCIe Interface
MOS-1121Y-1402E	Non-Isolated RS-422/485, DB37 to 4-ch DB9, PCIe Interface
MOS-1130Y-0201E	Isolated CANBus, 2-Ch, DB9, PCIe Interface
MOS-1110Y-0101E	Isolated 16 DI/8 DO, 1-Ch, DB37, PCIe Interface
MOS-2120-Z1201	Dual Intel I210 GbE LAN iDoor, 2-Ch, PCIe Interface
MOS-2230-Z1201E	CANBus module, 2-Ch, USB Interface

*ARK-2232L can support only one iDoor.

Optional 9-36V DC Power Module

Part Number	Description
MIOE-PWR2-00A1E	9-36V DC input power module
96PSA-A65W19P2-1	AC-to-DC Adapter, DC19V/3.42A 65W (for MIOe-PWR2)
1700001524	Power cable 3-pin 183cm, USA type (for MIOe-PWR2)
170203183C	Power cable 3-pin 183cm, EU type (for MIOe-PWR2)
170203180A	Power cable 3-pin 183cm, UK type (for MIOe-PWR2)

ARK-2232 Dual Layer Expansion Option Items

Optional Modules for ARK Plus Expansion

Part Number	Description
AMO-2201E (2nd Layer)	4 x RS232/422/485 + removable 2.5" drive
AMO-2202E (2nd Layer)	4x10/100/1000Base T(X) PoE
AMO-2203E (2nd Layer)	2-Port isolated CAN-Bus
AMO-2204E (2nd Layer)	3-port GbE + iDoor

ARK Plus Extended Modules

AMO-2201E

4 x RS232/422/485 + removable 2.5" drive bay

Specifications

General	
Bus interface	MIOe
Ports	4 x RS232/422/485 (set up by jumper)
Others	Removable 2.5" drive bay
Mechanical	
Dimension	260 x 34.6 x 140.2 mm (10.24" x 1.36" x 5.52")
Environment	
Operating Temp.	0 ~ 40 °C

Ordering Information

P/N	Description
AMO-2201E	4 x RS232/422/485 + removable 2.5" drive bay

AMO-2202E (AMO-I018)

4 x 10/100/1000Base T(X) PoE

Specifications

General	
Bus interface	MIOe
Ports	4 x RJ45 10/100/1000 Mbps PoE ports
Power consumption	Typical 15W, Max: 60W
Compatibility	IEEE 802.3, IEEE 802.3u, IEEE802.3ab, IEEE802.3x,IEEE802.3af Powered Device (PD) auto detection and classification Supports IEEE 802.3u Auto-Negotiation
Power	
Input	12 V_{DC} power input 4 pin phoenix power (Change System Power input Cable)
Output PoE Power	15W at 48 V_{DC} per PoE port
Mechanical	
Dimension	260 x 34.6 x 140.2 mm (10.24" x 1.36" x 5.52")
Environment	
Operating Temp.	0 ~ 40 °C

Ordering Information

P/N	Description
AMO-2202E	4 x 10/100/1000Base T(X) PoE

AMO-2203E

2-Port isolated CAN-Bus

Specifications

General	
Bus interface	MIOe
Ports	2 x DB9 isolated CAN-Bus
Communications	
Signal Support	CAN_H, CAN_L
Protocol	CAN 2.0 A/B
Data Transfer Rate	Programmable up to 1Mbps
CAN Frequency	16MHz
Protection	
Isolation Protection	2,500 V_{DC}
Mechanical	
Dimension	260 x 34.6 x 140.2 mm (10.24" x 1.36" x 5.52")
Environment	
Operating Temp.	0 ~ 40 °C

Ordering Information

P/N	Description
AMO-2203E	2-Port isolated CAN-Bus

AMO-2204E

3-Port GbE + iDoor

Specifications

General	
Bus interface	MIOe
Ports	3 x RJ45 10/100/1000 Mbps ports
Chipset	Intel 82583V Gigabit Ethernet Controller
Other	1 x iDoor
Mechanical	
Dimension	260 x 34.6 x 140.2 mm (10.24" x 1.36" x 5.52")
Environment	
Operating Temp.	0 ~ 40 °C

Ordering Information

P/N	Description
AMO-2204E	3-Port GbE + iDoor

*ARK-2232 supports one iDoor only.