ARK-1550

Intel® 4th Generation Core i5 4300U/ Celeron 2980U SoC Slim and Panel Mountable Fanless Box PC

Features

- Intel® Dual Core Celeron 2980U 1.6 GHz / Core i5 4300U 1.9 GHz SoC
- One Swappable 2.5" SATA HDD Bay and mSATA slot
- Triple Independent Displays by VGA + HDMI
- Optional VESA / DIN Rail Mounting kits
- Supports 2 x Intel GbE and 1 x GPIO
- Built-in 1 x full size MiniPCIe
- Lockable DC jack design
- Supports SUSIAccess and WISE-PaaS software pack
- Support Intel Turbo Boost Technology 2.0 in Core i5 4300U

Windows Embedded **WISE-DeviceOn** **SUSI API**

Specifications

		ARK-1550-S6A1E	ARK-1550-S9A1E
Processor System	CPU	Intel Celeron 2980U Dual Core	Intel i5-4300U Dual Core
	Frequency	1.6 GHz	1.9 GHz (Up to 2.9 GHz w/ Turbo Boost 2.0 enabled)
	L3 Cache	2 MB	3 MB
	BIOS	AMI EFI 128 Mbit	
Memory	Technology	DDR3L 1333 MHz	DDR3L 1600 MHz
	Max. Capacity	8 GB	
	Socket	1 x 204-pin SO-DIMM	
Graphics	Chipset	Intel HD Graphics	Intel GT2-4400 Graphics
	Graphic Engine	DirectX11.1, OpenGL 4.0, and OpenCL 1.2 Full AVC/VC1/MPEG2 HW Decode	
	VGA	Up to 1920 x 1200 at 60 Hz	
	HDMI	Lockable HDMI connector, up to 4096 x 2304 at 24 Hz (Lockable HDMI cable optional)	
Audio	Main System	Realtek ALC888S, High Definition Audio (HD), Line-in, Line out, Mic-in	
Ethernet	LAN #1	10/100/1000 Mbps Intel I218 GbE, support Wake on LAN	
	LAN #2	10/100/1000 Mbps Intel I210 GbE, support Wake on LAN	
I/O Interface	Serial Ports	1 x RS-232 & 2 x RS-232/422/485 (BIOS selectable)	
	USB Interface	2 x USB 2.0 & 2 x USB3.0	
	GPIO	8 bit GPIO	
Other	Watchdog timer	255-level timer interval, setup by software	
Expansion	Mini PCIe	1 x Full-size Mini PCIe, support mSATA storage or WWAN module*	
Storage	2.5" Drive Bay	1 x Swappable 2.5" SATA drive bay (Max Height 9.5 mm)	
	mSATA	Laverage MiniPCIe #1 slot	
Software Support	Microsoft Windows	Windows 10, Windows 8, Windows 7, WES8, WES7	
	Linux	Support (by Project)	
Power Requirement	Power Type	ATX/AT	
	Power Input Voltage	12 V_{DC}	
	Minimum Power Input	12V, 5A	
	Power Adaptor	AD to DC, DC 12V/5A, 60W (Optional)	
Power Consumption	Typical	5.64W	10.56W
	Max.	15.12W	28.2W
Mechanical	Construction	Aluminum housing	
	Mounting	Desk/Wall Mounting (Standard), VESA & DIN-Rail Mounting Kit (Optional)	
	Dimensions (W x H x D)	223 x 46.6 x 133.0 mm (8.69" x 1.81" x 5.18")	
Environment	Operating Temperature	With extended temperature SSD/mSATA/RAM :-20 ~ 55° C with 0.7m/s air flow With standard temperature HDD/SSD/mSATA/RAM peripherals:0 ~ 40° C with 0.7m/s air flow	
	Storage Temperature	-40 ~ 85° C (-40 ~ 185° F)	
	Relative Humidity	95% @ 40° C (non-condensing)	
	Vibration During Operation	With mSATA/SSD: 3 Grms, IEC 60068-2-64, random, 5 ~ 500 Hz, 1 hr/axis	
	Shock During Operation	With mSATA/SSD: 30G, IEC 60068-2-27, half sine, 11 ms duration	
Regulation	EMC	CE/FCC Class A, CCC, BSMI	
	Safety	UL, CCC, BSMI, CB	

* This is the hardware interface for wireless communication integration only. System level RF certification is not available.

研伟科技 13523776600

All product specifications are subject to change without notice.

Dimensions

Unit: mm

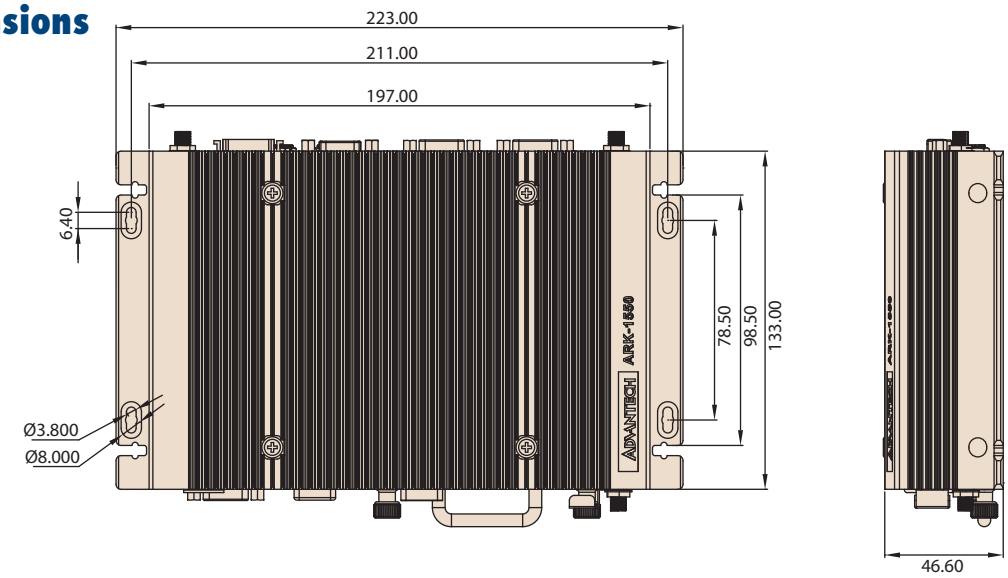

Front Panel External I/O

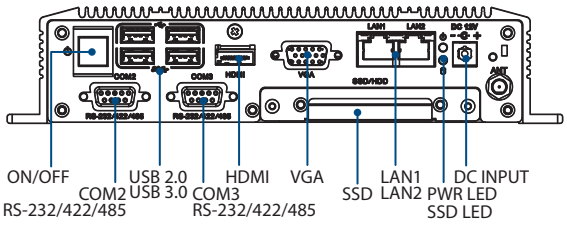

Rear Panel External I/O

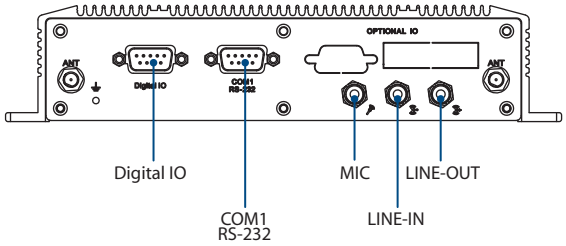

Ordering Information

Part Number	Intel CPU	RAM	VGA	HDMI	GbE	USB 2.0	USB 3.0	GPIO	RS-232	RS-232/ 422/485	Audio	MiniPCIe	2.5" HDD bay	mSATA	Operating Temperature
ARK-1550-S6A1E	Intel Celeron 2980U 1.6GHz	Up to 8GB	1	1	2	2	2	1	1	2	Line in Line out Mic in	1 Full size w/SIM	1	1	-20 ~ 55° C
ARK-1550-S6A2	Intel Celeron 2980U 1.6GHz	Up to 8GB	1	1	2	2	2	1	1	2	N/A	1 Full size w/SIM	1	1	-20 ~ 55° C
ARK-1550-S9A1E	Intel Core i5 4300U 1.9GHz	Up to 8GB	1	1	2	2	2	1	1	2	Line in Line out Mic in	1 Full size w/SIM	1	1	-20 ~ 55° C
ARK-1550-S9A2	Intel Core i5 4300U 1.9GHz	Up to 8GB	1	1	2	2	2	1	1	2	N/A	1 Full size w/SIM	1	1	-20 ~ 55° C

Note: Memory, storage and operating system bundled by request.

Packing List

Part Number	Description
-	1 x ARK-1550 Unit
-	1 x User Manual (Simplified Chinese)
-	1 x Power bracket

Embedded OS

Part Number	Description
2070012825	WES7E 64bit with EN/JP/TC/SC (OS size around 11G)
2070012882	WE8S 64bit with EN/JP/TC/SC (OS size around 13G)
20706WX6VS0024	Win10 IoT Ent 64bit Eng 1709 LTSB EN (OS size around 11.4GB)

Optional Items

Part Number	Description
96PSA-A60W12R1-3	AC-to-DC Adapter, DC 12V/5A 60W, with DC Jack Plug
96PSA-A84W12V1-3	AC-to-DC Adapter, DC 12V/7A 84W, with DC Jack Plug
1702002600	Power cable 3-pin 183 cm, USA type
1702002605	Power cable 3-pin 183 cm, Europe type
1702031801	Power cable 3-pin 183 cm, UK type
1700000237	Power cable 3-pin 183 cm, PSE type
AMK-V004E	VESA mounting kit
AMK-R004E	DIN-rail mounting kit
1700023855-01	1M lockable HDMI cable
1700023856-01	3M lockable HDMI cable