ARK-1123H A3

Intel® Celeron® Quad Core J1900 SoC with Dual HDMI/GbE IoT Fanless BOX PC

Features

- Intel® Celeron® J1900 Quad Core 2.0 GHz SoC
- 1 x 2.5" SATA HDD/SSD Bay
- 2 x GbE for Multiple Internet Transmission
- 2 x Independent HDMI
- 1 x RS-232/422/485 (BIOS selection)
- 1 x Full-Size MiniPCIe (ex. WLAN or WWAN module) #1
- 1 x Half Size mSATA
- Optional VESA / DIN Rail / Wall Mounting kits
- Threaded DC jack design
- Supports WISE-DeviceOn and Embedded Software APIs

Windows Embedded

WISE-DeviceOn

Specifications

		ARK-1123H-U0A3
Processor System	CPU	Intel® Celeron® Processor J1900 Quad Core 2.0 GHz SoC
	Frequency	2.0 GHz (Up to 2.41 GHz w/ burst frequency enabled)
	L2 Cache	2 MB
	BIOS	AMI EFI 64 Mbit (Default BIOS is supported for 64-bit OS installation, BIOS for 32-bit OS is supported by project)
Memory	Technology	DDR3L 1333MHz
	Max. Capacity	8 GB
	Socket	1 x 204-pin SO-DIMM
Graphics	Chipset	Intel® Atom SoC integrated
	Graphic Engine	DirectX* 11.1, OGL 3.0, OCL 1.1, OGL ES 2.0 Encode: H264, MPEG2/4, VC1, WMV9 Decode: H264, MPEG2
	HDMI	2 x Lockable HDMI connector, support up to 1920 x 1080 at 60Hz (2nd HDMI w/o audio function by Intel limitation)
Audio	Main System	ALC-888S, High Definition Audio. Line-out & Line-in
Ethernet	LAN #1	10/100/1000 Mbps Intel I210 GbE, support Wake on LAN
	LAN #2	10/100/1000 Mbps Intel I210 GbE, support Wake on LAN
I/O Interface	Serial Ports	1 x RS-232/422/485 (BIOS selectable)
	USB Interface	2 x USB 2.0 & 1 x USB3.0
Other	Watchdog timer	255-level timer interval, setup by software
Expansion	Mini PCIe	1 x Full-size Mini PCIe, support WLAN or WWAN module #1
Storage	2.5" Drive Bay	1 x 2.5" SATA HDD Bay (Max Height 9.5mm)
	mSATA	1 x Half-size mPCIe (Suggest to assembly by CTOS or T-Part due to complex installation)
Software Support	Microsoft Windows	WES7, Windows 7, WE8S, Windows 8 and Windows 10
	Linux	Support (by Project)
Power Requirement	Power Input Voltage	12 V_{DC}
	Power Adapter	AC to DC, DC12 V/3 A, 36 W with threaded design
Power Consumption	Typical	5.64W
	Max.	14.04W
Mechanical	Construction	Aluminum housing
	Mounting	VESA/DIN Rail/Wall Mounting Kits (Optional)
	Dimensions (W x H x D)	133.8 x 43.1 x 94.2 mm (5.27" x 1.7" x 3.71")
	Weight	0.8kg
Environment	Operating Temperature	With extended temperature SSD/mSATA/RAM : -20 ~ 60° C with 0.7m/s air flow With standard temperature HDD/SSD/mSATA/RAM peripherals:0 ~ 40° C with 0.7m/s air flow
	Storage Temperature	-40 ~ 85° C (-40~185° F)
	Relative Humidity	95% @ 40° C (non-condensing)
	Vibration During Operation	With mSATA/SSD: 3 Grms, IEC 60068-2-64, random, 5 ~ 500 Hz, 1 hr/axis With HDD: 0.5Grms, IEC 60068-2-64, random, 5~500Hz, 3 axes, 1hr/axis
	Shock During Operation	With mSATA/SSD: 30 G, IEC 60068-2-27, half sine, 11 ms duration With HDD: 10G, IEC 60068-2-27, half sine, 11 ms duration
Regulation	EMC	CE/FCC Class B, CCC, BSMI
	Safety	UL, CCC, BSMI, CB

#1 Mini PCIe is hardware interfaces for wireless communication integration only. Other system level RF certification is not available.

奥生研信科技 15923776600

Dimensions

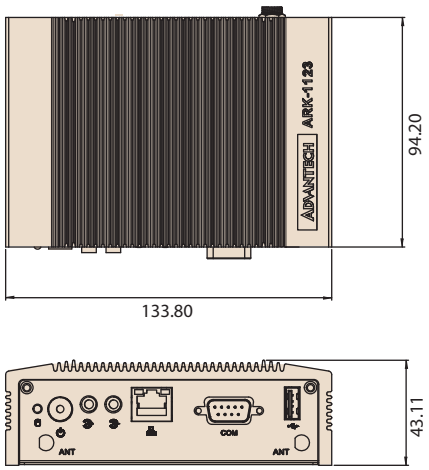

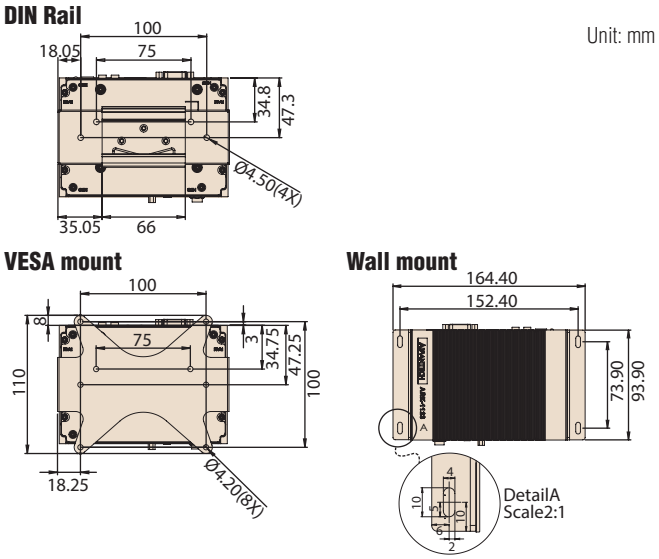

Front Panel External I/O Mechanical Layout/Drawing

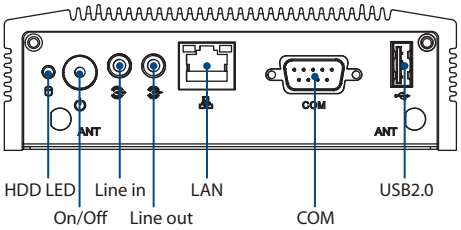

Rear Panel External I/O Mechanical Layout/Drawing

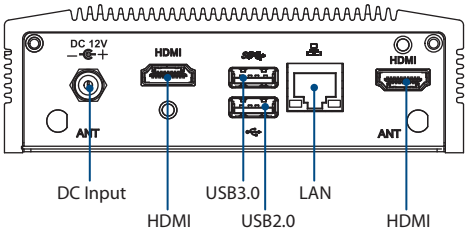

Ordering Information

Part Number	CPU	RAM	HDMI	GbE	USB 2.0	USB 3.0	RS-232/ 422/485	Audio	MiniPCIe	2.5" HDD bay	mSATA	Operating Temperature
ARK-1123H-U0A3	Intel Celeron J1900	Up to 8GB	2	2	2	1	1	Line in Line out	1 Full size	1	1 (H/S)	-20 ~ 60° C

Note: Memory, storage and operating system bundled by request.

Packing List

Part Number	Description
-	1 x ARK-1123H Unit
-	1 x User Manual (Simplified Chinese)
96PSA-A36W12W7-5	1 x AC to DC adapter DC 12V/3A 36W, -20 ~ 60° C

Embedded OS (Only available for T-Parts OEM, and CTOS service)

Part Number	Description
2070013033	WES7E 64-bit with EN/JP/TC/SC (OS size around 11G)
2070013371	WE8S 64-bit with EN/JP/TC/SC (OS size around 13G)
20706WX9ES0088	img W10 19EL ARK-1123H 64b 1809 ENU (OS size around 16.5GB)
2070014334	Win10 IoT Core_x32 V10.1.10586.0 EN
2070014369	IDP-WR3.1_x64 V1.0.1 EN

Optional Items

Part Number	Description
1700001524	Power Cable 3-pin 180cm, USA type
170203183C	Power Cable 3-pin 180cm, Europe type
170203180A	Power Cable 3-pin 180cm, UK type
1700008921	Power Cable 3-pin PSE Mark 183cm
AMK-V003E	ARK-112X series VESA mounting kit
AMK-R001E	ARK-112X series DIN-rail mounting kit
AMK-W001E	ARK-112X series Wall mounting kit
1700023855-01	1M lockable HDMI cable
1700023856-01	3M lockable HDMI cable