ARK-1124H A3

Intel® Atom™ E3940 QC SoC With Dual HDMI/ Dual LAN/ Four USB Modular Fanless Box PC

Features

- Intel® Atom™ E3940 Quad Core SoC
- Dual HDMI independent display support 4K resolution
- 1 x Full-size miniPCIe with SIM holder for communication module #1
- 1 x M.2 2230 E Key for WIFI module #2
- 1 x 2.5" SATA III SSD/HDD and 1 x mSATA
- TPM built in for system security
- -20 ~ 60 °C extended operating temperature
- 12V lockable DC jack power input
- Optional 12~24V power module (Dual Layer)
- Advantech iDoor module compatible (Dual Layer)
- Advantech WISE-DeviceOn support

Windows Embedded **WISE-DeviceOn** LISTED c UL us E180881 RoHS COMPLIANT 2002/95/EC

Specifications

		ARK-1124H-S6A3
Processor System	CPU	Intel® Atom™ E3940 Quad Core Soc
	Frequency	1.6 GHz, turbo burst 1.8 GHz
	L2 Cache	2 MB
Memory	Technology	DDR3L 1866 MHz
	Max. Capacity	8 GB
	Socket	1 x 204-pin SO-DIMM
Graphics	Chipset	Intel® HD Graphics 500
	Graphic Engine	4K Codec Decode& Encode for H.264, MPEG2, MVC, VC-1, WMV9, H.265 / HEVC, VP8, JPEG / MJPEG
	HDMI	HDMI 1.4b 3840 x 2160 @ 30Hz
	Dual Display	Yes, HDMI + HDMI, dual display support 4K resolution
Ethernet	LAN1	10/100/1000 Mbps Intel i210 GbE, support Wake On Lan
	LAN2	10/100/1000 Mbps Intel i210 GbE, support Wake On Lan
Audio	Interface	Realtek ALC888S, High Definition Audio. Line-out, Line-in
IO Interface	Serial Ports	1 x RS-232/422/485 port with auto flow control
	USB Interface	4 x USB 3.0
Other	Watchdog timer	255 levels timer interval, setup by software
	TPM	Infineon SLB9665XQ 2.0
Expansion	Mini PCIe	1 x full-size mPCIe for WLAN/WWAN with nano SIM holder #1
	M.2	1 x M.2 2230 E-key for WIFI #2
	iDoor	1, optional (2nd layer)
Storage	SSD/HDD	Supports 1 x 2.5" SATA III Drive Bay (Compatible with 9.5mm height)
	mSATA	1 x Half-size mSATA (by CTOS or T-PN)
Software Support	Microsoft Windows	Win 10 IoT Enterprise LTSB
	Linux	Support by project
Power Requirement	Power Type	AT/ATX
	Power Input Voltage	$12V_{DC}$ (Optional 12~24V power module)
	Minimum Power Input	12 V, 5 A
	Power Adapter	AC to DC, DC12 V/5 A, 60 W with lockable DC Jack
Power Consumption	Typical	6.02W
	Max.	15.7W
Mechanical	Construction	Aluminum housing
	Mounting	DIN-Rail/Wall/VESA Mounting Kits (Optional)
	Dimensions (W x H x D)	133 x 46.4 x 94.2mm (5.24" x 1.83" x 3.71")
	Weight	0.7 Kg (1.55lb)
Environment	Operating Temperature	With extended temperature peripherals: -20 ~ 60 °C (-4 ~ 140 °F) with 0.7m/s air flow With 2.5-inch hard disk 0 ~ 40 °C (32 ~ 104 °F) with 0.7m/s air flow
	Storage Temperature	- 40 ~ 85 °C (-40 ~ 185 °F)
	Relative Humidity	95% @ 40 °C (non-condensing)
	Vibration During Operation	With SSD: 3 Grms, IEC 60068-2-64, random, 5 ~ 500 Hz, 1 hr/axis. With HDD: 0.5Grms, IEC 60068-2-64, random, 5~500Hz, 3 axes, 1hr/axis
	Shock During Operation	With SSD: 30 G, IEC 60068-2-27, half sine, 11 ms duration With HDD: 10G, IEC 60068-2-27, half sine, 11 ms duration
	EMC	CE/FCC Class B, CCC, BSMI
	Safety Certifications	UL CB, CCC and BSMI

#1 SIM holder is hardware interface for wireless module integration only. No system level RF certification is available.
#RED for WiFi/BT are available with AMO-WIFI10. Other system level RF certification is not available.

研伟科技 15323776600

Dimensions

Unit: mm

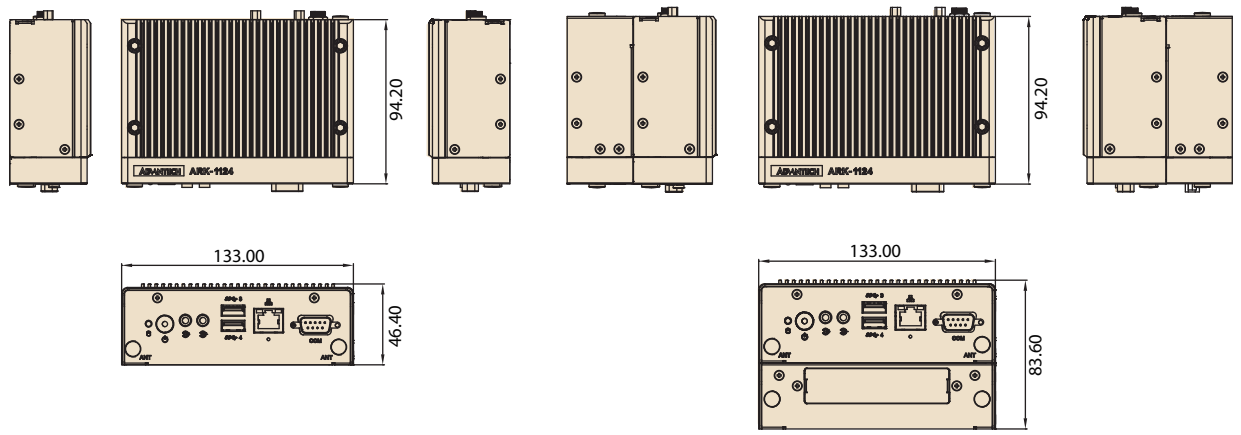

Front Panel External I/O Mechanical Layout/Drawing

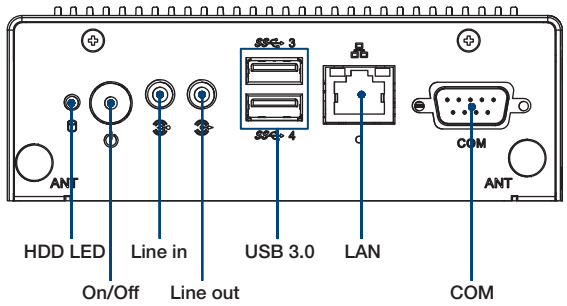

Rear Panel External I/O Mechanical Layout/Drawing

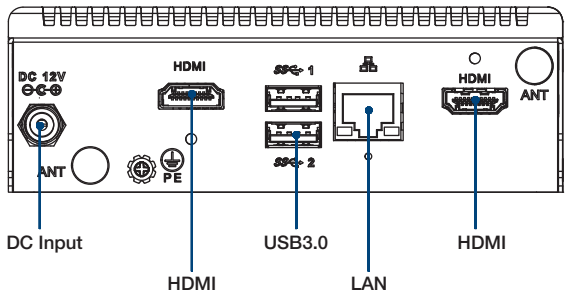

Ordering Information

Part No.	CPU	RAM	HDMI	GbE	USB 3.0	RS-232/ 422/485	Audio	Full-size MiniPCIe	SIM	M.2	2.5" SATA III HDD Bay	Power Input	Operating Temp.
ARK-1124H-S6A3	Intel Atom E3940 1.6 GHz SoC	Up to 8GB	2	2	4	1	Lin-out, Line-in	1	1	1	1	12 V_{DC}	-20 ~ 60 °C

Note: Memory, storage and operating system bundled by request.

Packing List

Part Number	Description
-	1 x ARK-1124H Unit
-	1 x User Manual (Simplified Chinese)
96PSA-A60W12W7-3	A/D 100-240V 60W 12V C14 LOCKABLE DC PLUG
-	LAN clip
-	Wrench for top cover

Optional Embedded OS

Part Number	Description
20706WX9ES0057	Win10 IoT LTSC 2019 64bit ENG for ARK-1124H

Optional Item for Default SKU

Part Number	Description
1702002600	Power cable 3-pin 183cm, USA type
1702002605	Power cable 3-pin 183cm, EU type
1702031801	Power cable 3-pin 183cm, UK type
1700000237	Power cable 3-pin 183cm, PSE type
AMK-W001E	ARK-112X series Wall mounting kit
AMK-V003E	ARK-112X series VESA mounting kit
AMK-R001E	ARK-112X series DIN-rail mounting kit
1700023855-01	1M lockable HDMI cable
1700023856-01	3M lockable HDMI cable
AMO-WIFI10	802.11 a/b/g/n/ac, QCA6174A, 2T2R, w/BT4.1, M.2 2230 E Key RED system level RF certification is ready with ARK-1124H single layer

ARK Plus Extended Modules

ARK-1124 Dual Layer Expansion Option Items

Expansion Kit Selection

AMO-1101 and iDoor

AMO-1101 and AMO-P011

Ordering Information

Optional ARK Plus Mechanical Kit

P/N	Description
AMO-1101	Mechanical kit for 2nd layer expansion

Optional iDoor Expansion

Part Number	Description
MOS-2230-Z1201E	CANBus module, 2-Ch, USB Interface
MOS-2220-X1101E	Parallel LPT module, 1-Ch, USB Interface
MOS-2110Z-1201E	USB module, 2-Ch, PCIe Interface
MOS-2120-Z1101E	Giga LAN Ethernet module, 1-Ch, PCIe Interface
MOS-1130Y-0201E	Isolated CANBus, 2-Ch, DB9, PCIe Interface
MOS-1110Y-0101E	Isolated 16 DI/8 DO, 1-Ch, DB37, PCIe Interface
MOS-2220-Z1101E	High Speed COM module, 1-Ch, USB Interface
MOS-1120Y-0202E	Isolated RS-232, 2-Ch, DB9, PCIe I/F
MOS-1121Y-0202E	Isolated RS-422/485, 2-Ch, DB9, PCIe I/F
MOS-1120Y-1402E	Non-Isolated RS-232, 4-Ch, DB37, PCIe I/F
MOS-1121Y-1402E	Non-Isolated RS-422/485, 4-Ch, DB37, PCIe I/F
MOS-2120-Z1201	Dual Intel I210 GbE LAN, 2-Ch, PCIe I/F

Optional 12-24V DC Power module

Part Number	Description
AMO-P011	12-24V DC input power module Operating temp. -20~60 °C
96PSA-A60W12P2-3	AC to DC ADP, 12V/5A 60W (for AMO-P011)
1702002600	Power cable 3-pin 183cm, USA type
1702002605	Power cable 3-pin 183cm, EU type
1702031801	Power cable 3-pin 183cm, UK type
1700000237	Power cable 3-pin 183cm, PSE type

* For iDoor module expansion, please order AMO-1101 and iDoor P/N
* For Wide range power module expansion, please order AMO-1101 and AMO-P011
* For iDoor and wide range power module expansion, please order AMO-1101, iDoor P/N and AMO-P011.