ARK-2121S

Outdoor NVR w/4 PoE Ports
Intel® Atom E3845 SoC Fanless Box PC

Features

- Intel® Atom E3845 Quad Core 1.91 GHz SoC
- 4 PoE Ports to Support Mainstream IP Cameras
- 3KV isolation for 6 x Di & 2 x Do
- Diversity Communication Abilities, ex. WWAN, WLAN
- 9 ~ 36 V_{DC}* Wide Power Input w/isolation
- 1 x Removable 2.5" drive bay
- Supports iManager, SUSIAccess and Embedded Software APIs
- Up to -40 ~ 70° C wide temperature support (by project)

Specifications

		ARK-2121S-S9A2E
Processor System	CPU	Intel Atom E3845 QC SoC
	Frequency	1.91 GHz
	L2 Cache	2 MB
	BIOS	AMI EFI 64 Mbit
Memory	Technology	DDR3L 1333 MHz
	Max. Capacity	8 GB
	Socket	1 x 204-pin SO-DIMM
Graphics	Chipset	Intel Gen7 Graphics
	Graphic Engine	DirectX11, OpenGL3.2, OpenCL1.1 Full HW acceleration, decode: H.264, MPEG2/4, VC-1, WMV9. Encode: H.264, MPEG2
	VGA	Up to 2560 x 1600 @ 60Hz
	HDMI	Lockable HDMI connector, up to 1080p
Audio	Main System	Realtek ALC888S, High Definition Audio (HD), Line-in, Line out, Mic-in
Ethernet	LAN #1	10/100/1000 Mbps Intel I210-IT GbE, support Wake on LAN
	LAN #2	10/100/1000 Mbps Intel I210-IT GbE, support Wake on LAN
I/O Interface	Power over Ethernet, PoE	4 x 10/100 Mbps - 4ports full-load, IEEE802.3af Class 2 (7Watt) - 2ports full-load, IEEE802.3af Class 3 (15.4Watt)
	Serial Ports	2 x non-isolated RS-232/422/485 with auto flow control
	GPIO	6 x DI & 2 x DO w/ 3KV isolation Input Voltage: 0 to 30 V_{DC}, Output Current: Max. 500 mA per channel On-state Voltage: 24 V_{DC} nominal, open collector to 30 V_{DC}
	USB	3 x USB 2.0 & 1 x USB3.0
Other	Watchdog timer	255-level timer interval, setup by software
Expansion	Mini PCIe #1	Full-size Mini PCIe (USB, SATA interface)
	Mini PCIe #2	Full-size Mini PCIe, w/SIM holder (PCIe, USB interface)
	Mini PCIe #3/4	2 x Full-size Mini PCIe w/SIM holders (USB interface)
Storage	2.5" Drive Bay	1 x removable 2.5" drive bay (Max 9.5mm height)
	mSATA	Laverage MiniPCIe #1 slot
Software Support	Microsoft Windows	Win7, Win10
	Linux	Support by project
Power Requirement	Power Type	ATX/AT
	Power Input Voltage*	9 ~ 36 V_{DC} w/ isolation
	Power Consumption	16W (Typical), 66W (Max)
	Isolation	1.5KV Isolated
Mechanical	Construction	Aluminum housing, Silver
	Mounting	Din-Rail mounting, Desk/wall-mounting, VESA mounting
	Dimensions (W x H x D)	264.5 x 69.2 x 133.0 mm (10.41" x 2.72" x 5.24")
Environment	Operating Temperature	With extended temperature peripherals: -30 ~ 60° C with 0.7m/s air flow (standard), -40 ~ 70° C with 0.7m/s air flow (by project) With standard temperature peripherals: 0 ~ 45° C with 0.7m/s air flow
	Storage Temperature	-40 ~ 85° C (-40~185° F)
	Relative Humidity	95% @ 40° C (non-condensing)
	Vibration During Operation	With mSATA/SSD: 3 Grms, IEC 60068-2-64, random, 5 ~ 500 Hz, 1 hr/axis
	Shock During Operation	With mSATA/SSD: 30 G, IEC 60068-2-27, half sine, 11 ms duration
Regulation	EMC	CE/FCC Class A, CCC, BSMI (No RED certification)
	Safety	CB, UL, CCC, BSMI

* Power Input Constraint at low voltage: 9~10.9V.

All product specifications are subject to change without notice.

Dimensions

Unit: mm

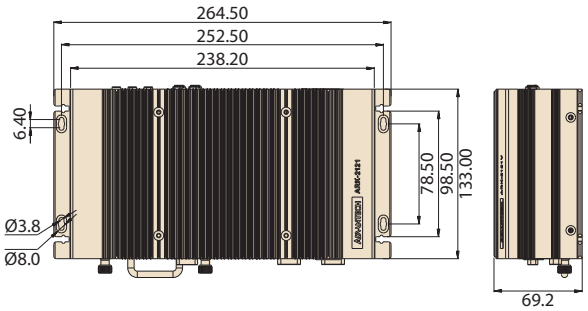

DIN Rail

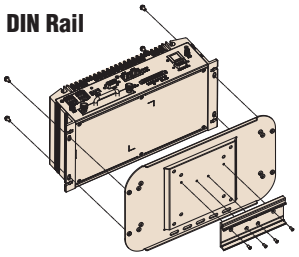

VESA mount

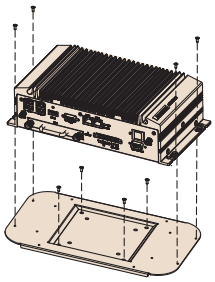

Wall mount

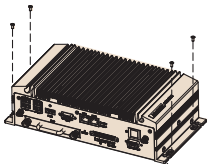

Front Panel External I/O Mechanical Layout/Drawing

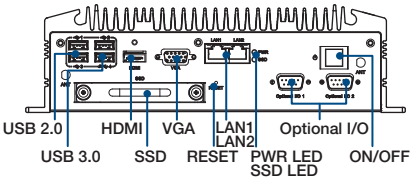

Rear Panel External I/O Mechanical Layout/Drawing

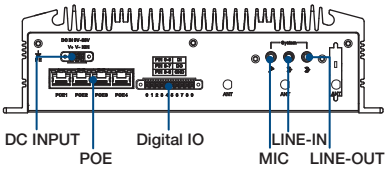

Ordering Information

Part Number	Intel CPU	RAM	2.5" Drive	mSATA	Display	GbE	PoE	USB	DIO	RS-232/ 422/485	MiniPCIe	SIM Holder	Power Input	Operating Temperature
ARK-2121S-S9A2E	Intel Atom E3845 QC 1.91 GHz	Up to 8GB	1	1	1 x HDMI 1 x VGA	2	4	3 x USB2.0 1 x USB3.0	6Di 2Do	2	4 x Full Size	2	9 ~ 36 V_{DC}	-30 ~ 60° C

Packing List

Part Number	Description
-	1 x ARK-2121 Unit
-	1 x Driver/Utility CD/Manual
-	1 x User Manual (Simplified Chinese)
1652000049	3-pole phoenix power block 3.81mm
1652003235	10-Pin DIO plug in block

Optional Items

Part Number	Description
96PSA-A120W19T2-3	AC-to-DC Adapter
1702002600	Power Cable 3-pin 180cm, USA type
1702002605-02	Power Cable 3-pin 183cm, Europe type
1700018704	Power Cable 3-pin 183cm, UK type
AMK-V004E	VESA mounting kit
AMK-R004E	DIN-rail mounting kit

Embedded OS

Part Number	Description
20706WE7ES0013	ARK-2121V-S9A2E WES7 OS image
20706WX6ES0002	ARK-2121V Win10 IoT Enterprise OS image (US, 64bit)

*Default BIOS is supported for 64-bit OS installation, BIOS 32-bit OS is supported by project