TS-206

In-Vehicle Full HD NVR w/4 PoE Ports 6th Gen. Intel® Core i7 6600U / Core i5 6300U SoC Fanless Box PC

Features

- Intel® Core i7-6600U 2.6GHz / Core i5-6300U 2.4GHz SoC
- 4 PoE Ports to Support Mainstream IP Cameras
- Diversity Communication Abilities, ex. WWAN, WLAN
- Intelligent Vehicle Power Ignition
- 12/24V_{DC} with E-Mark certification
- 1 x Removable 2.5" drive bay
- Advantech DeviceOn built-in for easy manageability

Windows Embedded WISE-DeviceOn LISTED c UL us E190881 CE FCC RoHS COMPLIANT 2002/95/EC

Specifications

		TS-206-U6A1E	TS-206-U4A1E
Processor System	CPU	Intel® Core i7-6600U Dual Core	Intel® Core i5-6300U Dual Core
	Frequency	2.6 GHz	2.4 GHz
	L3 Cache	4 MB	3 MB
	BIOS	AMI EFI 128 Mbit	
Memory	Technology	DDR3L 1600 MHz	
	Max. Capacity	16GB	
	Socket	2 x 204-pin SO-DIMM	
Graphics	Chipset	HD Graphics 520	
	Graphic Engine	DurectX 12, DirectX 11.3, OpenGL 4.4, and OpenCL 2.1 Full AVC/VC1/MPEG2 HW Decode	
	VGA	1920 x 1200@60Hz or 2048 x1152@60Hz with reduced blanking	
	HDMI	Lockable HDMI connector, up to 4K at 24 Hz	
Audio	Main System	Realtek ALC888S, High Definition Audio (HD), Line-in, Line out, Mic-in	
Ethernet	LAN #1	10/100/1000 Mbps Intel® I219LM	
	LAN #2	10/100/1000 Mbps Intel® I210-IT	
I/O Interface	Power over Ethernet, PoE	4 x 10/100 Mbps -4ports full-load, IEEE802.3af Class2(7Watt) -2ports full-load, IEEE802.3af Class3(15.4Watt)	N/A
	Serial Ports	2x non-isolated RS-232/422/485 with auto flow control	2x isolated RS-232/422/485 with auto flow control (3KV isolation) 2x non-isolated RS-232/422/485 with auto flow control
	CANBus	Option, 2ch CANBus 2.0A/B (1xCOM will be replaced)	
	USB Interface	2 x USB 2.0 & 2 x USB3.0	
	GPIO	6 x DI & 2 x DO w/ 3KV isolation Input Voltage: 0 to 30 V_{DC}, Output Current: Max. 500 mA per channel On-state Voltage: 24 V_{DC} nominal, open collector to 30 V_{DC}	
Other	Watchdog timer	255-level timer interval, setup by software	
	TPM	TPM2.0	
Expansion	Mini PCIe #1	Full-size Mini PCIe w/SIM holder (PCIe, USB interface)	
	Mini PCIe #2	Full-size Mini PCIe (PCIe, USB, SATA interface)	
	Mini PCIe #3/4	2 x Full-size Mini PCIe w/SIM holders (USB interface)	
Storage	2.5" Drive Bay	1 x removable 2.5" drive bay (Standard 9.5mm height, 15mm height support by project)	
	mSATA	Laverage MiniPCIe #2 slot	
Software Support	Microsoft Windows	WES7, Windows7, Windows 10	
	Linux	Support by project	
Power Requirement	Power Input Voltage	12/24V_{DC} with E-Mark certification	
	Vehicle Power Ignition	Selectable boot-up & shut-down voltage, on/off delay time	
	Power Consumption	26W (Typical), 76W (Max)	26W (Typical), 46W (Max)
	Isolation	1.5 KV Isolated	

研伟科技 15323776600

All product specifications are subject to change without notice.

Specifications (Cont.)

Mechanical	Construction	Aluminum housing, Black
	Mounting	Desk/Wall-mounting Din-Rail/VESA mounting by option
	Dimensions (W x H x D)	264.5 x 75.1 x 133.0 mm (10.41" x 2.96" x 5.24")
Environment	Operating Temperature	With extended temperature peripherals:-20 ~ 60 °C with 0.7m/s air flow With standard temperature peripherals:0 ~ 45 °C with 0.7m/s air flow
	Storage Temperature	-40 ~ 85 °C (-40~185 °F)
	Relative Humidity	95% @ 40 °C (non-condensing)
	Vibration/Shock	With mSATA/SSD: IEC 60721-3-5 Class 5M3
Regulation	EMC	CE/FCC Class B, CCC, BSMI
	Safety	UL, CCC, BSMI, E-Mark(E13) (No RED certification)
	In-Vehicle Power	ISO7637-2 Lev.4

Dimensions

Unit: mm

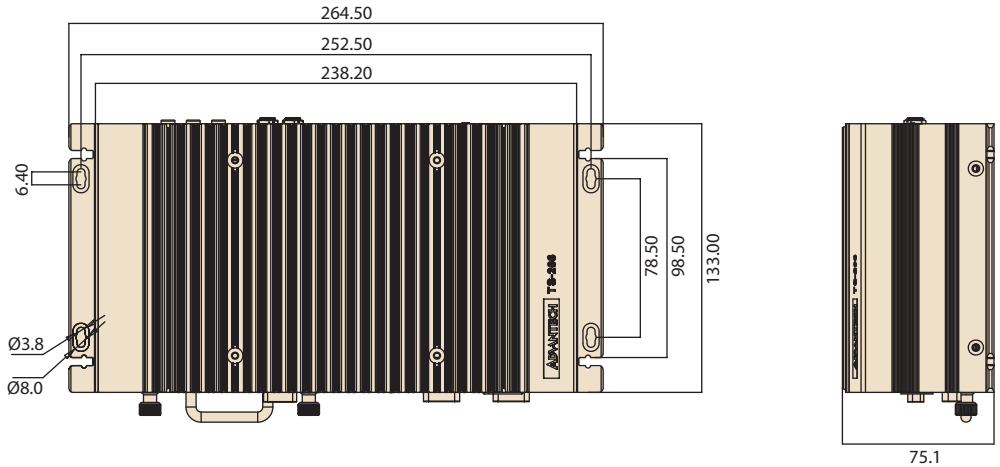

DIN Rail

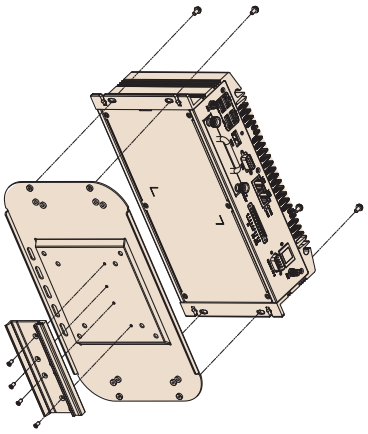

VESA mount

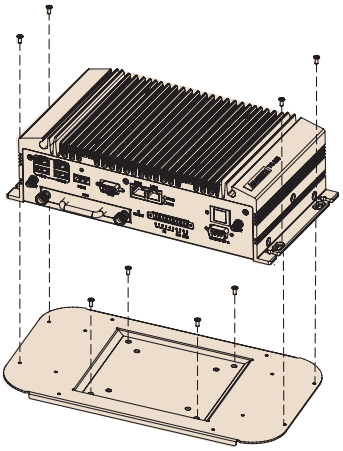

Wall mount

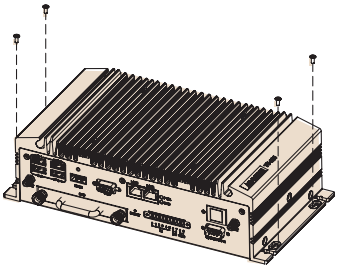

TS-206-U6A1E External I/O Mechanical Layout/Drawing

Front Panel

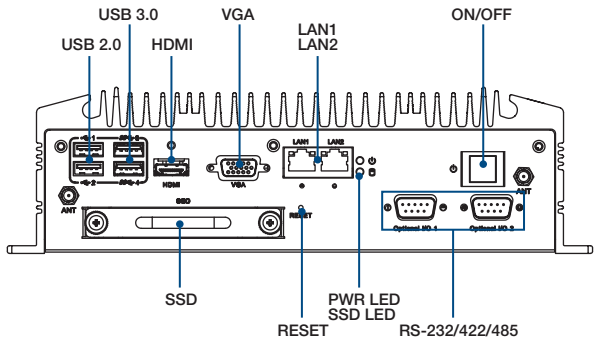

Rear Panel

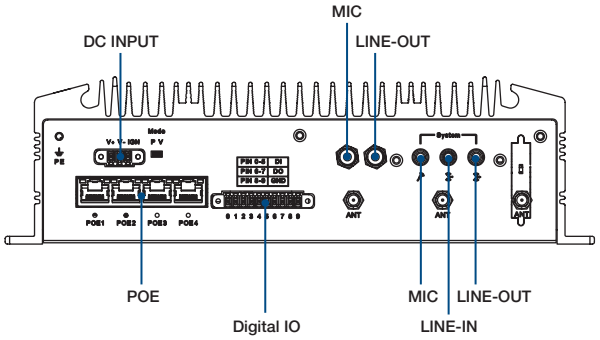

TS-206-U4A1E External I/O Mechanical Layout/Drawing

Front Panel

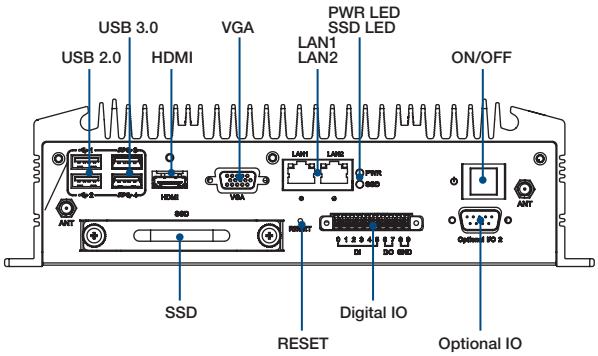

Rear Panel

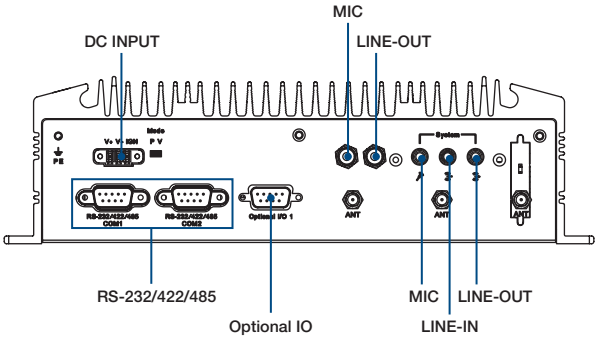

Ordering Information

Part Number	Intel CPU	RAM	2.5" Drive	mSATA	Display	GbE	PoE	USB	DIO	COM	MiniPCIe	SIM Holder	Power Input	Operating Temperature
TS-206-U6A1E	Intel® Core i7 6600U 2.6 GHz	Up to 16GB	1	1	1 x HDMI 1 x VGA	2	4	2 x USB2.0 2 x USB3.0	6Di 2Do	2	4 x Full Size	3	12/24V_{DC}	-20 ~ 55 °C
TS-206-U4A1E	Intel® Core i5-6300U 2.4 GHz						N/A			4				-20 ~ 60 °C

Note: Intel Celeron 3955U is supported by request

Packing List

Part Number	Description
-	1 x TS-206 Unit
-	1 x Driver/Utility CD/Manual
-	1 x User Manual (Simplified Chinese)
1652000049	3-pole phoenix power block 3.81mm
1652003235	10-Pin DIO plug in block

Embedded OS

Part Number	Description
20706WE7PS0026	TS-206, WES7P 64bit OS
20706WX9HS0124	TS-206-U6A1E, Win10 IoT Ent 2019 High-end LTSC 64bit. English
20706WX9VS0128	TS-206-U4A1E, Win10 IoT Ent 2019 Value LTSC 64bit. English

Optional Items

Part Number	Description
96PSA-A120W24T2-3	AC-to-DC Adapter
1702002600	Power Cable 3-pin 180cm, USA type
1702002605-02	Power Cable 3-pin 183cm, Europe type
1700018704	Power Cable 3-pin 183cm, UK type
EMCB-200U-MP01E	SQC CANBus Full-size, 2-Ch, USB I/F
1700024379-01	CanBus internal cable, 2-Ch, For TS-206-U4A1E
1700024380-01	CanBus internal cable, 2-Ch, For TS-206-U6A1E
AMK-V004E	VESA mounting kit
AMK-R004E	DIN-rail mounting kit