DS-980 Series

Maximize the Impact of Your Message with Six-Display Video Wall Solutions

Windows Embedded Windows 7 Windows 8 Windows 10

intel IoT Solutions Alliance Premier

Features

- 6th Intel® Core™ i7-6700TE/ i5-6500TE/ i3-6100TE/ Celeron G3900TE
- Supports True 4K (4096 x 2130 @60Hz) resolution by HDMI2.0
- Innovative stackable & expandable design for PCI Express x16 slot
- Efficient multi-display configurations with WebAccess/IMM: 1x6, 2x3, 3x2, 6x1
- Supports Microsoft Windows 10 with proven compatibility

Acronis intel Security WebAccess/IMM WISE-PaaS/RMM

Specifications

		DS-980GB/ GF (expansion)	DS-980GL (light config.)
Processor System	CPU	Intel i7-6700TE/ i5-6500TE/ i3-6100TE/ CLN G3900TE, rPGA (LGA 1151)	Intel i7-6700TE/ i5-6500TE/ i3-6100TE/ CLN G3900TE, rPGA (LGA 1151)
	System Chipset	Intel Q170	Intel Q170
	BIOS	AMI uEFI 128 Mbit	AMI uEFI 128 Mbit
Memory	Technology	2 x DDR4 260-pin SODIMM	2 x DDR4 260-pin SODIMM
	Max. Capacity	32GB (16GB per SODIMM)	32GB (16GB per SODIMM)
Display	Controller	CPU embedded	CPU embedded
	Graphic Engine	Intel HD graphics 530	Intel HD graphics 530
	Video Format	H.265/HEVC, H.264/AVC, MPEG2, VC1/WMV9, VP8, JPEG/MPEG,VP9	H.265/HEVC, H.264/AVC, MPEG2, VC1/WMV9, VP8, JPEG/MPEG,VP9
	Output	3 x HDMI	3 x HDMI
	Max. Resolution	4096 x 2160 @ 60Hz	4096 x 2160 @ 60Hz
Storage	SATA	*2 x 2.5" SATAIII (support RAID 0/1) 1 x mSATA via mini-PCIe	1 x 2.5" SATAIII (support RAID 0/1) 1 x mSATA via mini-PCIe
Audio	Chipset	Realtek ALC892, High Definition Audio (HD)	Realtek ALC892, High Definition Audio (HD)
I/O Interface	HDMI 2.0	1 (HDMI 1)	1 (HDMI 1)
	HDMI 1.4	2 (HDMI 2 & 3, supports CEC by HDMI 2)	2 (HDMI 2 & 3)
	LAN (RJ-45)	2 (LAN1: Intel I219; LAN2: Intel I211)	2 (LAN1: Intel I219; LAN2: Intel I211)
	USB	4 x USB3.0; 2 x USB2.0	4 x USB3.0; 2 x USB2.0
	Audio	1 x SPDIF/ Line-out (support Jack sense via OS setting); 1 x Mic-in	1 x SPDIF/ Line-out (supports Jack sense via OS setting); 1 x Mic-in
	Serial	1 x RS-232 or 2 x RS-485 + RS-422 with extension cable	1 x RS-232 or 2 x RS-485 + RS-422 with extension cable
	PCIe x16 (Internal)	1	-
	Full-size mini-PCIe (Internal)	1 (for optional WIFI, 3G, LTE module / mSATA)	1 (for optional WIFI, 3G, LTE module/ mSATA)
	M.2 (Internal)	1 (2230 E key for WIFI)	1 (2230 E key for WIFI)
	SIM slot (Internal)	1	1
Power Requirement	Management	ACPI 3.0	ACPI 3.0
	Power Consumption	Max.: 53.61W; Idle: 9.56W (i7-6700TE w/o RISER card) Max.: 51.68W; Idle: 9.19W (i5-6500TE w/o RISER card)	Max.: 53.61W; Idle: 9.56W (i7-6700TE) Max.: 51.68W; Idle: 9.19W (i5-6500TE)
	Input Type	ATX/ AT mode	ATX/AT mode
	Power Supply	12V DC-in 150W for top; optional 12V DC-in 84W for bottom	12V DC-in 150W
Watchdog Timer	Output	Interrupt, system reset	Interrupt, system reset
	Interval	Programmable 1~255sec.	Programmable 1~255sec.
Physical Characteristics	Mounting	VESA/ Desk mounting	VESA/ Desk mounting
	Dimensions (W x D x H)	190 x 250 x 88 mm	190 x 250 x 53 mm
	Weight	3.6kg	3.1kg

All product specifications are subject to change without notice.

Dimensions

Unit: mm [inch]

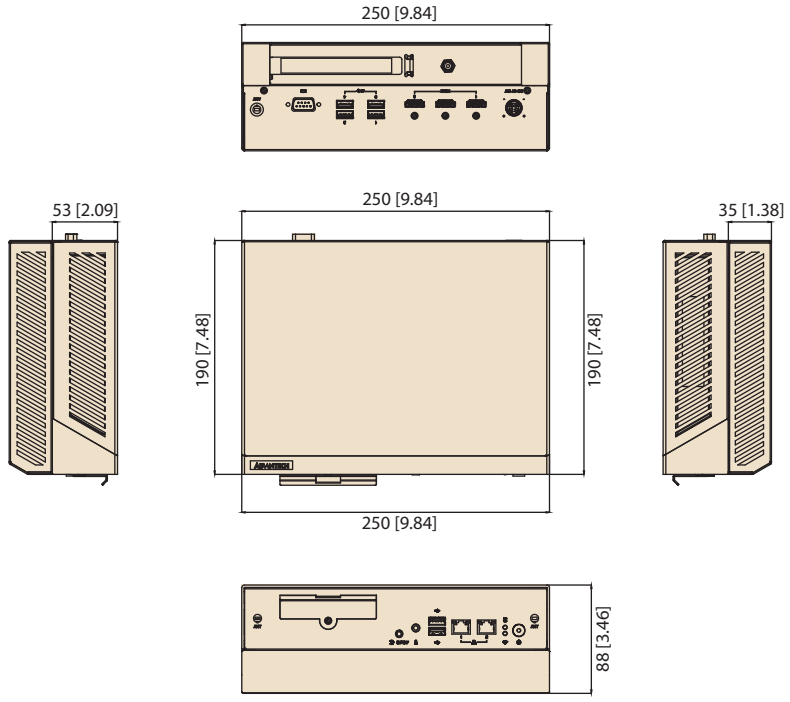

Specifications Cont.

Environment	Operating Temperature	0 ~ 40° C (32 ~ 113° F)	0 ~ 40° C (32 ~ 113° F)
	Relative Humidity	95% @ 40° C (non-condensing), Operating	95% @ 40° C (non-condensing), Operating
	Vibration Resistance during operating	0.8 Grms, IEC 60068-2-64, random, 5~500Hz, 1 hr/axis	0.8 Grms, IEC 60068-2-64, random, 5~500Hz, 1 hr/axis
Software Development Kit	Operating System	Windows 10 (64bit), 8.1 (64bit), 7 (64bit/ 32bit)	Windows 10 (64bit), 8.1 (64bit), 7 (64bit/ 32bit)
	Signage Software	WISE-PaaS/RMM & WebAccess/IMM	WISE-PaaS/RMM & WebAccess/IMM
Certifications	Electromagnetic	CE, FCC Class B, CCC, BSMI	CE, FCC Class B, CCC, BSMI
	Safety	UL, CB, CCC, BSMI (No RED certification)	UL, CB, CCC, BSMI (No RED certification)

*Only support 2.5" SATAIII SSD for bottom

Front View

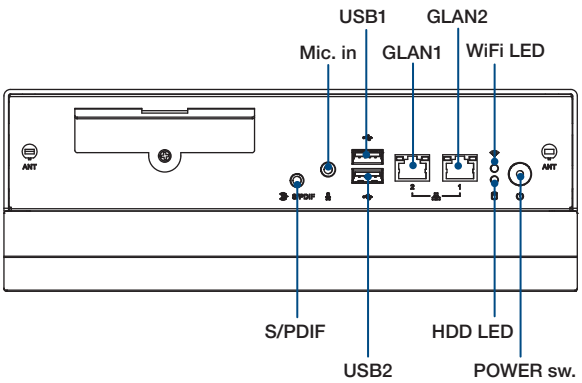

Rear View

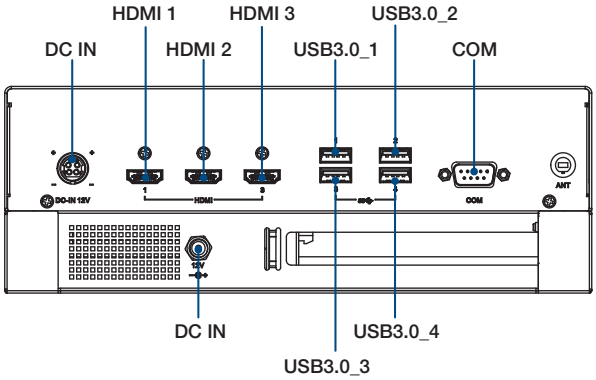

Ordering Information

Part Number	Configuration (Expansion/ Light)	CPU	RAM	Storage (Top)	Storage (Bottom)	PCIe x16	Power supply
DS-980GB-00A1E	E	Option	Option	Option	1 optional	1	2 but default 12V DC-in 150W for top, optional 12V DC-in 84W for bottom
DS-980GF-U4A1E	E	i7-6700TE	2x 4GB	500GB HDD	1 optional	1	2 but default 12V DC-in 150W for top, optional 12V DC-in 84W for bottom
DS-980GF-U3A1E	E	i5-6500TE	2x 4GB	500GB HDD	1 optional	1	2 but default 12V DC-in 150W for top, optional 12V DC-in 84W for bottom
DS-980GL-00A1E	L	Option	Option	Option	-	-	1, 12V DC-in 150W
DS-980GL-U4A1E	L	i7-6700TE	2x 4GB	500GB HDD	-	-	1, 12V DC-in 150W
DS-980GL-U3A1E	L	i5-6500TE	2x 4GB	500GB HDD	-	-	1, 12V DC-in 150W

Packing List

Part Number	Description
-	1 x DS-980 System
XECG-DPS-150AB-15B	1 x 12V DC-in 150W power adapter
968EMLSAI1	1 x Signage Software (WISE-PaaS/RMM & WebAccess/IMM) CD package
2026098000	1 x China RoHS declaration
2006098000	1 x Traditional & Simplified Chinese User Manual
2190000902	1 x warranty card
1960074877N001& 19300306A0	2 x mounting brackets with 4 screws
1990012452S000& 1930007199-01	4 x stand rubber with 4 screws
	[Expansion config. only] 1 x 2nd Storage module including 1 x bracket, 4 x damper, 4 x screws for installing on a bottom layer, 4 x step screws for installing storage on a bracket, 1 x SATA cable

Processor

Part Number	Description
96MPI7S-2.4-8M11T1	CORE 2.4G 8M 1151P 4 CORE I7-6700TE (35W)
96MPI5S-2.3-6M11T1	CORE 2.3G 6M 1151P 4 CORE I5-6500TE (35W)
96MPI3S-2.7-4M11T	CORE 2.7G 4M 1151P 2 CORE I3-6100TE (35W)
96MPCLS-2.3-2M11T	CELERON 2.3G 2M 1151P G3900TE (35W)

Embedded OS Image

Part Number	Description
2070015140	W10 16HL DS-980 64b 1701 ENU, for i7
2070015141	W10 16VL DS-980 64b 1701 ENU, for Celeron/i3/i5
2070014310	WE8S x64, V6.5.3, 10 multiple language
2070014311	WES7P x64, V5.8.0, 10 multiple language
2070014312	WES7E x64, V5.7.0, EN/JP/SC/TC language

*Place OS image on top layer of SATAIII storage

Power Cord

Part Number	Description
1702002600	3-pin America power cord (UL)
1700024848-01	3-pin Taiwan power cord (BSMI)
1700018705	3-pin Europe power cord
1702031801	3-pin United Kingdom power cord
1700000237	3-pin Japan power cord (PSE)
1700000596-11	3-pin China power cord (CCC)

WIFI & 3G module

Part Number	Description
AMO-WIFI06E	Realtek/wifi 802.11bgn/ mini PCIe with cable & antenna
AMO-WIFI07E	DHXA/wifi802.11abgn+BT4.0/miniPCIe with cable & antenna
AMO-HSDPA02E	U-blox/HSDPA 6band/miniPCIe with cable & antenna
EWM-W160M201E	M.2 2230, 802.11 b/g/n, RTL8188EE,1T1R
1750007965-01	M.2 cable, 30cm length
1750000318	M.2 antenna