EPC-S101

Embedded Fan-less System

Features

- Intel® Braswell Celeron N3160/N3060, Atom E8000, DDR3L-1600MHz SODIMM up to 8GB
- Fanless slim system with wall-mount & desk mount removable flange, default support VESA mount & Din-rail mount at bottom side
- Supports 2 x Intel GbE, 8 x USB, HDMI, VGA, 4 x COM and 1 x Digital IO
- Built-in 1 x full size mSATA and 1 x full size MiniPCIe w/SIM
- Supports iManager, WISE-PaaS/DeviceOn and Embedded Software APIs

Software APIs: GPIO, Watch Dog Timer, Backlight On/Off, Brightness

Utilities: Hardware Monitor, System Info, System Throttling, Thermal Protection, Data Security

Windows 10 DeviceOn iManager

Specifications

		EPC-S101CQ-S6A1	EPC-S101CD-S6A1	EPC-S101AQ-S0A1
Processor System	CPU	Intel Celeron N3160	Intel Celeron N3060	Intel Atom E8000
	Frequency	1.6 GHz (Quad-Core)	1.6 GHz (Dual-Core)	1.04 GHz (Dual-Core)
	Max Turbo Frequency	2.24 GHz	2.48 GHz	2GHz
	L2 Cache	2MB	2MB	2MB
	BIOS	AMI UEFI BIOS at 64Mbit		
Memory	Technology	DDR3L 1600MHz 2GB		
	Max. Capacity	Up to 8 GB*		
	Socket	1 x 204-pin SODIMM		
Display	Controller	Intel Gen8 LP		
	Graphic Engine	DirectX11.1, OpenGL4.2, OpenCL1.2 (OpenCL not for Win7) HW Decode: H.265/HEVC @ level 5, H.264 @ Level 5.2, MPEG2, MVC, VC-1, WMV9, JPEG, VP8. HW Encode: H.264 @ Level 5.1, MVC, JPEG		
	VGA	1920 x 1200 at 60Hz		
	HDMI	HDMI 1.4b up to 2560x1600 at 60Hz		
	Dual Display	VGA + HDMI		
Ethernet	LAN #1	10/100/1000 Mbps , RTL8111E		
	LAN #2	10/100/1000 Mbps , RTL8111E		
Audio	Main system	Realtek ALC892, High Definition Audio (HD), Line-in, Line out, Mic-in		
Expansion	Mini PICe #1	1 x Full-size Mini PCIe w/ SIM		
	Mini PICe #2	1 x Full-size Mini PCIe (default support mSATA)		
Storage	2.5"HDD Drive	Option		
	mSATA	1		
Other	Watchdog Timer	255-level timer interval, setup by software		
Front I/O Openings	USB	4 (2 x USB2.0, 2 x USB 3.0)		
	RJ45	2		
	VGA	1		
	HDMI	1		
	Antenna	1		
Rear I/O Openings	COM	4 (2 x RS232, 2 x RS232/422/485)		
	USB	2 (2 x USB2.0)		
	Audio	1 (Line-out, Line-in, Mic-in)		
	Digital I/O	1		
	Antenna	1		
Miscellaneous	Circular Cutouts	1		
	LED Indicators	Power, HDD		
	Control	Power switch		
Power Requirement	Power Type	AT		
	Power input Voltage	12V		
	Connector type	2-Pole Phoenix DC plug in		
Environment	Operating	0 ~ 50° C (32 ~ 122° F) w/ 0.7m/s airflow		
	Non-operating	-40 ~ 85° C (-40~185° F)		
	Relative Humidity	40° C @ 95%, Non-Condensing, operating 60° C @ 95%, Non-Condensing, non-operating		
	Vibration (5~500Hz)	With mSATA/SSD: 3 Grms, IEC 60068-2-64, random, 5 ~ 500 Hz, 1 hr/axis		
	Shock	With mSATA/SSD: 30G, IEC 60068-2-27, half sine, 11 ms duration		
Physical Characteristics	Mounting	Desk/Wall-mounting, VESA mounting, Din rail mounting standoff reserved		
	Dimensions (W x H x D)	System dimension : 188 x 39 x 150 mm		
	Weight	0.95 kg		
Regulation	EMC	CE/FCC Class B (*No RED certification), CCC, BSMI, KCC		
	Safety	CB, UL, CCC, BSMI		

* 1 x 2G DDR3L RAM is included in default package.
* Other RAM size is supported by request.

研伟科技 15323776600

Dimensions

Unit: mm

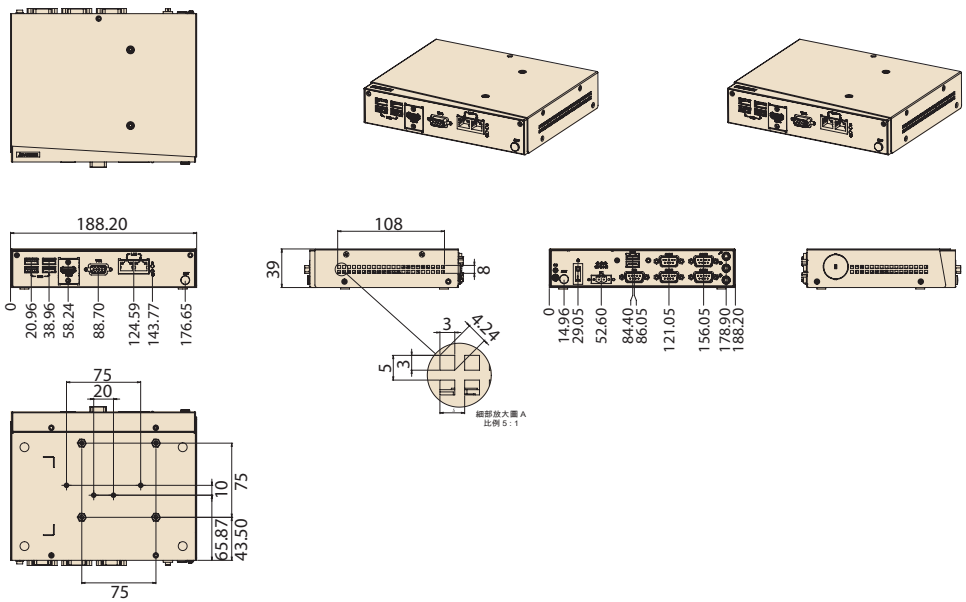

Ordering Information

Part Number	Intel CPU	RAM	VGA	HDMI	GbE	USB 2.0	USB 3.0	RS-232	RS-232/ 422/485	Audio	MiniPCIe	2.5" HDD bay	mSATA	Operating Temperature
EPC-S101CQ-S6A1	Intel Celeron N3160	2G DDR3L*	1	1	2	4	2	2	2	Line in Line out Mic in	2 Full size (1 w/ SIM)	1	1 (Leverage MiniPCIe slot)	0 ~ 50° C
EPC-S101CD-S6A1	Intel Celeron N3060													
EPC-S101AQ-S0A1	Intel Atom E8000													
EPCS101CQ1801-T (for ATW only)	Intel Celeron N3160													
EPCS101AQ1802-T (for ATW only)	Intel Atom E8000													

* 1 x 2G DDR3L RAM is included in default package.
* Other RAM size is supported by request.

Embedded OS/API

OS/API	Part No.	Description
Win8.1		64bit
WES7E	20706WE7EM0020	64bit
Win10		64 bit
VxWorks		Support by request
Software API		SUSI API

Packing List

Part Number	Description
	1 x EPC-S101 Unit
	1 x Startup Manual (Simplified Chinese)
1700009001	A Cable JACK/1*2P-5.0 4.5CM C=R B (Phoneix Jack to DC Jack)
1990027162N010	Thermal Pad 19.5X19.5X1.5 K=1.2 XR-HL
1990019498N020	Thermal-Pad 59x19.5x1.5 XR-HL K=1.2 TP Apus
1930004607	HDD Screw M3x4L S/S D=4.8 H=1 (2+) ST BZn
96PSA-A60W12P2-1 (for ATW only)	DC power 12V/5A 60W, 0 ~ 40 °C, w/ Phoneix Jack type power connector (only EPCS101CQ1801-T & EPCS101AQ1802-T include)

Optional

Part Number	Description
96PSA-A60W12P2-3	DC power 12V/5A 60W, 0 ~ 40° C, w/ Phoneix Jack type power connector
1702002600-01	Power cable 3-pin 183 cm, USA type
1700018704	Power cable 3-pin 180 cm, UK type
1700018705	Power cable 3-pin 183 cm, Europe type
1700000237-01	Power cable 3-pin 183 cm, PSE type
1960074451N001	Wall Mount Bracket *1 (Need 2pcs for 1set)
1930001422	Wall Mount Screw *1 (Need 4pcs for 1set)
1960018849T031	Din Rail Bracket *1

Front View

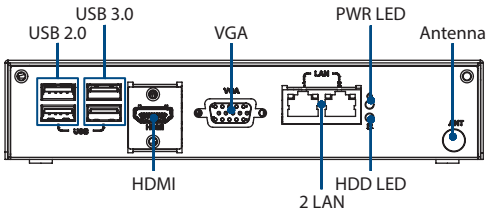
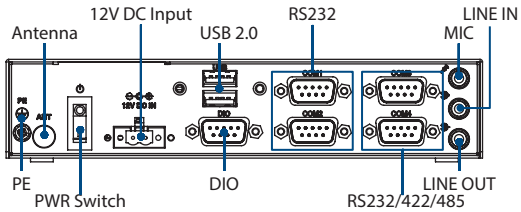
Rear View