WISE-3310

Wireless IoT Mesh Network Gateway

WISE-PaaS/RMM

Features

- All-in-One RISC-based Intelligent and Industrial platform with Freescale i.MX6 Dual Cortex-A9 1.0 GHz processor
- 99.999% reliability WSN MESH network
- Linux 3.10.17 BSP embedded
- Compliant to 6LoWPAN and IEEE 802.15.4e standards
- Support 200/100 wireless nodes (by different SKU)
- Power saving mode and fanless design
- Web UI user interface

Introduction

Advantech RISC-based WPAN Network Controller, WISE-3310, is powered by the Freescale i.MX6 Dual Cortex-A9 1.0 GHz processor, Linux 3.10.17 BSP and Linear Dust LTC5800 Cortex M3 MCU. With changeable embedded modules and feature-rich protocol, WISE-3310 creates a cost-effective open platform for easy integration and development in different M2M/IoT applications. Connect with Advantech WPAN sensor nodes, by Smartmesh IP protocol for applications in wireless sensor networks where seamless internet protocol (IP) is valued. Also, WISE-3310 provide the WISE-Agent to connect with WISE-PaaS which provide the IoT Software platform for streamline IoT application development.

Specifications

Processor System	CPU	Freescale ARM Cortex-A9 i.MX6 Dual 1 GHz
Memory	Technology	DDR3 1066 MHz
	Capacity	On-board DDR3 1GB
	Flash	4GB eMMC NAND Flash for OS. And 4MB SPI NOR Flash for Advantech boot loader
Ethernet	Chipset	Freescale i.MX6 integrated RGMII
	Speed	1, 10/100/1000 Mbps
	PoE	-
WSN	Standard	Complaint 6LoWPAN and IEEE802.15.4e
	Frequency Band	2.400 ~ 2.4800 GHz
	Number of Channels	15
	Channel Separation	5 MHz
	Raw Data Rate	250 Kbps
	Output Power	Hight setting: 8 dBm/ Low setting: 0 dBm
Wireless	WiFi	IEEE802.11bgn (option)
	Cellular	-
Graphics	HDMI	-
	VGA	-
RTC	RTC	Yes
Watchdog Timer	WDT	Yes
Indicator and Button	USB	-
	Audio	-
	GPIO	-
	CANBus	-
	I²C	-
	LED	2 for WSN status, 1 Yellow LED for WSN1 and 1 Green LED for WSN2
	Button	1 reset button for system reboot
	Serial Port	1 x RS-232 (CTS, RTX,Tx,Rx)
	Switch	1 Power Switch
	Mini PCIe Socket	1 half-size Mini PCIe slot
	SD Socket	1 x SD slot
Expansion	Antenna hole (SMA)	2 for 200-node SKU, 3 for 100-node SKU; 4 antenna holes totally
	SIM	-
Power	DC-input	DC 9~ 24V
	Power Type	DC-in
	Power Consumption	3.96W (Max)
Environment	Operating Temperature	0 ~ 40° C (32 ~ 104° F)
	Operating Humidity	5% ~ 95% Relative Humidity, non-condensing
Mechanical	Dimensions(L x W x H)	205 x 126 x 31 mm with a metal plate 180 x 114 x 31 mm without a metal plate
	Mounting	Metal bracket wall mount
	Weight	312g
Operating System	Linux	V3.10.17
Certifications		CE(No RED certification)/FCC Class B, TELEC, KCC, NCC

昊生 研伟科技 15323776600

Dimensions

Unit: mm

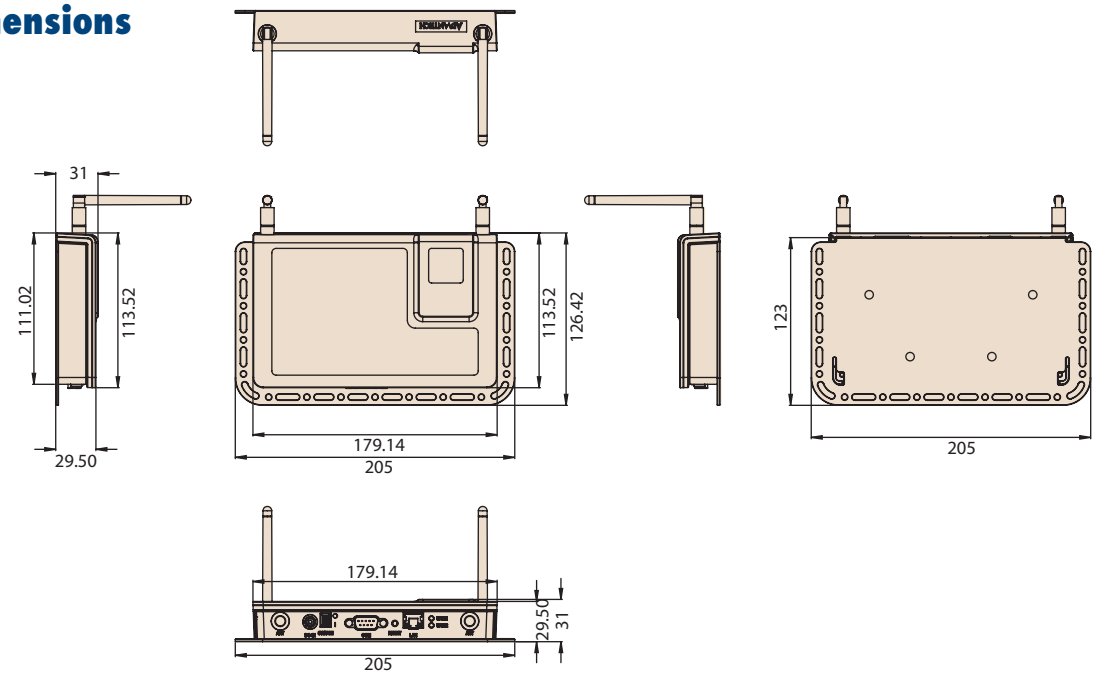

Software Key Features

Completed Software Services

- BSP and image
- SDK
- WSN API
- Device management API (SUSI /SUSI IoT API)
- WISE-Agent

Easy-use from sensor to cloud

- WSN Mesh self-forming
- Web UI setting for WSN and Cloud
- WSN API with CoAP protocol
- WISE-Agent connect to WISE-PaaS/RMM

Ordering Information

Model Name	Description
WISE-3310-D200L1E	WISE-3310 WPAN GW, 200-Node, Linux OS
WISE-3310-D100L1E	WISE-3310 WPAN GW, 100-Node, Linux OS

Packing List

Part No.	Description	Quantity
96PSA-A36W12R1	ADP A/D 100-240V 36W 12V	1
1750007622-01	Antenna 2.4Ghz 3.5dBi SMA Male Reverse	2 (for WISE-3310-D200L1E) 1 (for WISE-3310-D100L1E)

Related Models

Model Name	Description
WISE-1020-0C01E	Wireless IoT Node with on-board Chip-antenna
WISE-1020-0S01E	Wireless IoT Node with external SMA Antenna
WISE-1021WR-1100E	Wireless IoT Node with TI MSP430 MCU