# EIS-S232

## Simplifying the multi-cloud with a domain focus application

Preliminary

DeviceOn/iEdge

## Features

- Integrated hardware plus software for back-end data service and light private cloud
- Pre-configured system: Intel 10th gen. Core i3/i7Xeon CPU, Ubuntu OS and RAM/mSATA SSD
- Open and standard structure: Kubernetes built-in, Multiple DB Connections, On-demand Microservices
- Integrated IoT Software: Grafana, Prometheus, Kubeapps, RabbitMQ,etc.
- Application integration: Vertical Application Deployment , Platform Management, AI model inference runtime, Data Synchronization
- Sustainable Management: Microservices Condition Monitoring, Load Balancing and Self-Healing
- DeviceOn/iEdge inside for IoT Device Operation Management, Data collection and protocol convert

## Introduction

For accelerating IoT application landing, Advantech provide Edge cloud solution EIS-S232 for our customer to build a stable and reliable back-end data service or light private cloud. EIS-S232 is a all-in-one solution for user.It builded in Intel Xeon CPU to offer extreme computing power for data service. Moreover, EIS-S232 is integrated Kubernates to support micro-service, and build-in complete back-end software components, includes RabbitMQ for IoT Hub, mongoDB and PostgreSQL for database, Grafana for data visualization and Prometheus for Back-end management. EIS-S232 also provide dynamically scale out function, user can extend the resources if necessary.It help customer create IoT applications more easily and flexibly. Speed up the time to market.

## Software Stack

### Platform Management

**Message Broker**

- Lightweight and easy to deploy on premises and in the cloud. It supports multiple messaging protocols.

**Backend Management**

- Kubernetes is a deployment, scaling, and management of containerized applications. MicroK8s derived from it, provides a smaller footprint, scalable from a single node to a high-availability production cluster.
- Prometheus, an open-source software application that is used for event monitoring and alerting.

**Database Management**

- A powerful, open source object-relational database system.
- MongoDB is a document database, which means it stores data in JSON-like documents.

### Operation Management

DeviceOn/iEdge

**Data Synchronization**

- DB Synchronization
- Data Visualization
- Data center migration

**Vertical APP Deployment**

- Centralize Management
- Easy deploy cloud to Edge
- Save development time and cost

**Cloud Service Integration**

- Flexible API
- Ready to use app
- Platform security protection

### Application Development

**Data Visualization**

- Allows you to query, visualize, alert on and understand your metrics.

**App Management**

- Kubeapps is a web-based UI for deploying and managing applications in Kubernetes clusters.
- The Docker Registry is a stateless, highly scalable server side application that stores and lets you distribute Docker images.
- ChartMuseum is an open-source Helm Chart Repository server written in Go (Golang).

**Machine Learning**

- Making deployments of machine learning (ML) workflows on Kubernetes Device Management



All product specifications are subject to change without notice.

# Specifications

| | | | | |
|---|---|---|---|---|
| Processor System | CPU | W-1290TE | i7-10700E | i3-10100E |
| | Frequency | 1.8-4.5GHz | 2.9-4.5GHz | 3.2~3.8GHz |
| | L3 Cache | 20MB | 16MB | 6MB |
| | Cores | 10 | 8 | 4 |
| | TDP | 35W | 65W | 65W |
| | Chipset | W480E | | |
| | BIOS | AMI EFI 256Mbit | | |
| Memory | Capacity | DDR4 2666 ECC 32GB | | |
| Graphics | Chipset | Intel® UHD Graphics 630 | | |
| | Graphic Engine | DirectX 12, OpenGL 4.5<br>HW Encode: H.265/HEVC, H.264/MPEG-4 AVC, MPEG-2, JPEG/MJPEG and VP8.<br>HW Decode: H.265/HEVC, H.264/MPEG-4 AVC, MPEG-2, VC-1/WMV9, JPEG/MJPEG, VP8 and VP9 | | |
| | VGA | 1920x1200@ 60Hz | | |
| | HDMI | 1 HDMI port, HDMI 1.4 for HD video playback, 4096x2160@30Hz | | |
| | Optional 3rd Display module | DVI-D / DP / HDMI Display Port | | |
| | Triple Display | VGA+HDMI + 3rd display module | | |
| Ethernet | LAN1 | 10/100/1000 Mbps Intel I219-LM GbE, support Wake On Lan | | |
| | LAN2 | 10/100/1000 Mbps Intel I210 GbE, support Wake On Lan | | |
| Audio | Interface | Realtek ALC888S, High Definition Audio, Line-out/Mic-in (switch) | | |
| Others | Watch dog Timer | 255-level timer interval, setup by software | | |
| | TPM | TPM 2.0 (by optional AMO-I029) | | |
| I/O Interface | Serial Port | 4 x RS-232/422/485 port with auto flow control, 2 x RS-232; COM3 support 5V/12V power supply (by jumper) | | |
| | USB | 4 x USB 3.2 (Gen2,10G),2 x USB 3.0, 2 x Independent USB 3.0 | | |
| | GPIO | 16bit GPIO | | |
| Expansions | Mini PCIe | 1 x Full-size Mini PCIe (1 x support mSATA, 1 x support SIM holder) #1 | | |
| | M.2 | 1 x E key for WiFi #1 | | |
| | Add-on Card Slot | 2 Slot PCI + 1 Slot PCIex16 | | |
| | Maximum card size | 110mm (H) x 180mm (L) | | |
| Storage | HDD | 2 x 2.5" SATAIII 15mm height HDD bay support Intel SW RAID (Up to 4 x 2.5" SATAIII HDD bays by optional AMK-A0035) | | |
| | mSATA | 1 x mSATA socket (Share with Mini PCIe) | | |
| Software Support | Microsoft Windows | Windows 10 | | |
| | Linux | By Project Support | | |
| Power Requirements | Power Type | AT/ATX | | |
| | Power Input Voltage | 12-36V | | |
| | Power Adapter | AC to DC, 230W (Optional) | | |
| Power Consumption (CPU/Memory Only) | Typical | 30W | | |
| | Max. | 64.8W | | |
| Mechanical | Construction | Aluminum housing | | |
| | Mounting | Desk mounting | | |
| | Dimensions (W x H x D) | 197.2 x 204 x 230 mm | | |
| | Weight | 6.41Kg | | |
| Environment | Operating Temperature | Up to 65W processor with extended temp peripherals: -20 ~ 60° C with 0.7m/s air flow<br>with HDD: 0 ~ 40° C with 0.7m/s air flow | | |
| | Storage Temperature | -40 ~ 85° C | | |
| | Relative Humidity | 95% @ 40° C (non-condensing) | | |
| | Vibration During Operation | With SSD: 3 Grms, IEC 60068-2-64, random, 5 ~ 500 Hz, 1 hr/axis. | | |
| | Shock During Operation | With SSD: 30 G, IEC 60068-2-27, half sine, 11 ms duration | | |
| | EMC | CE/FCC Class B, CCC, BSMI | | |
| | Safety | CB, UL, CCC, BSMI | | |

#1 SIM holder and M.2 slot are hardware interfaces for wireless communication integration only. System level RF certification is not available.

研伟科技 15323776600

## Dimensions

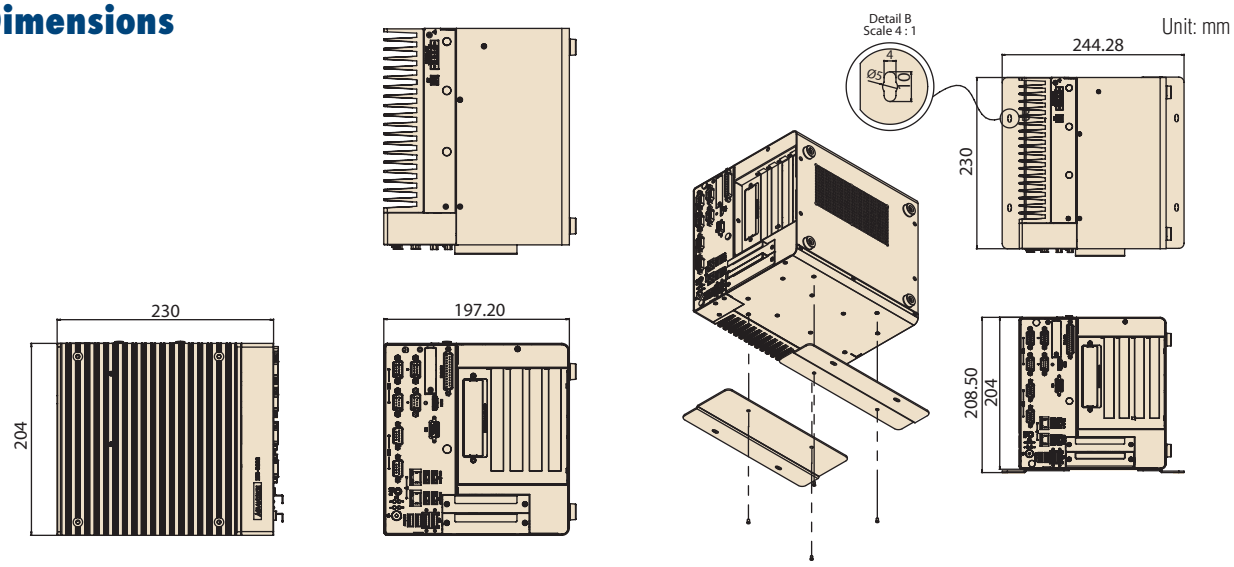


### External I/O Mechanical Layout/Drawing

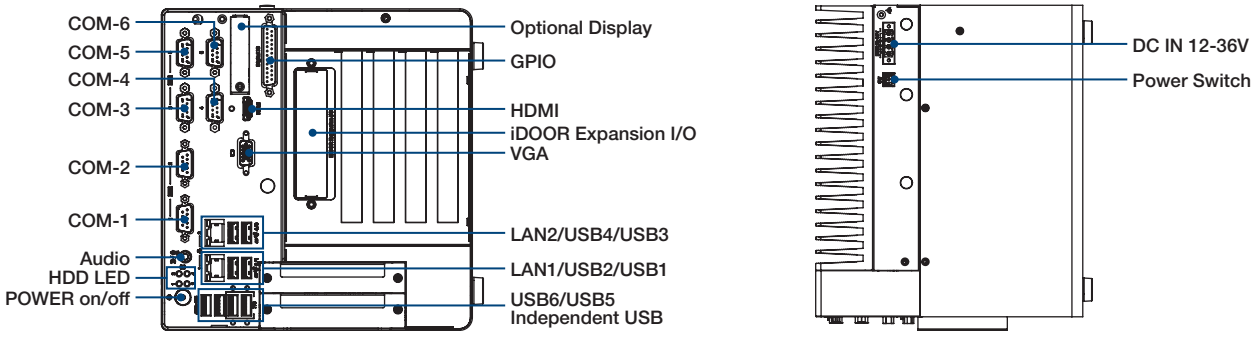


## Ordering Information

| Part No. | CPU | DDR4 | SSD | Gbe | VGA | HDMI | RS-232 | RS-232/422/485 | USB | MiniPCIe | SIM | M.2 | DC Input | Expansion |
|---|---|---|---|---|---|---|---|---|---|---|---|---|---|---|
| EIS-S232-U20STB1 | Xeon W-1290TE | DDR4 2666 ECC 32GB | 1TB SSD | 2 | 1 | 1 | 2 | 4 | 8 | 1 | 1 | 1 | 12-36V | PCIe x 16 + 2PCI |
| EIS-S232-01DSTB1 | I7-10700E | Optional | Optional | 2 | 1 | 1 | 2 | 4 | 8 | 1 | 1 | 1 | 12-36V | PCIe x 16 + 2PCI |
| EIS-S232-01DS281 | I3-10100E | Optional | Optional | 2 | 1 | 1 | 2 | 4 | 8 | 1 | 1 | 1 | 12-36V | PCIe x 16 + 2PCI |

## Packing List

| Part Number | Description |
|---|---|
| - | EIS-S232 Unit |
| - | User Manual (Simplified Chinese) |
| - | China RoHS |
| - | Desk mounting kit |
| 36WSWPE2I001A1 | DeviceOn\iEdge |
| 36WSWPDOBD0211 | McAfee Application Control Lite/Acronis Backup 11.7 for Windows PC |

## Embedded OS

| Part Number | Description |
|---|---|
| 20706WX9HS0148 | Win 10 IoT 2019 Ent 64-bit |

## EIS-S232 Default SKU Option Items

### Optional Item for Default SKU

| Part Number | Description |
|---|---|
| 96PSA-A230W24P4-3 | AC to DC adapter, DC 24V 230W, -20 ~ 60 °C |
| 1702002600 | Power cable 3-pin 183cm, USA type |
| 1702002605 | Power cable 3-pin 183cm, EU type |
| 1702031801 | Power cable 3-pin 183cm, UK type |
| 1700000237 | Power cable, 3-Pin 183cm, PSE type |

## EIS-S232 Optional HDD expansion Kit

| Part Number | Description |
|---|---|
| AMK-A0035 | 2 x internal HDD bays kit (Max Height 15mm) |