RSB-4760

Qualcomm ARM® Cortex®-A53 APQ8016 3.5" SBC

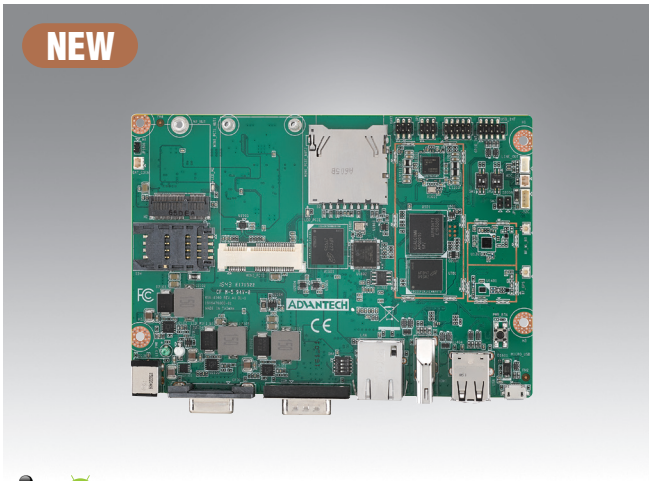

Features

- Qualcomm ARM® Cortex®-A53 APQ8016 Quad core up to 1.2 GHz
- Onboard 1GB/2GB LPDDR3 memory and 8GB eMMC
- 1 HDMI, 1 RS-232/422/485, 1 GbE, 4 USB 2.0, 16 GPIO, 1 I2C, 1 SPI
- Highly intergrated on-board wireless connectivity - Wi-Fi, BT, and GNSS
- Connevtivity expansion capability - M.2, mini-PCIe
- Wide voltage range DC power input
- Support Android, Linux and Debian

Introduction

RSB-4760 is a RISC 3.5" single board computer (SBC) powered by Qualcomm ARM® Cortex®-A53 APQ8016 processor that supports full HD display and intergrades on board wireless solution – Wi-Fi, BT and GNSS. RSB-4760 also features in mini PCIe, M.2, and SIM card slots for expanding connectivity capability, like 3G, 4G/LTE modules. Equipped with complete Android, Linux and Debian BSPs, this SBC enables customers to easily develop unique application on specific OS.

Specifications

Form Factor		3.5" SBC
Processor System	CPU	Quad-core ARM® Cortex® A53 APQ8016
	Technology	LPDDR3 1066MHz
	Capacity	On-board 1GB / 2GB LPDDR3
	Flash	8GB
Graphics	HDMI	1 HDMI, 1920 x 1080 at 60Hz
	H/W Video Codec	Encode: 30 fps 720p (H.264 Baseline/MPEG-4) 30 fps 1080p (MPEG-4/H.264/VP8/H.263) Decode: 30 fps 1080p (MPEG-4/H.264/H.263/DivX/MPEG2/VC1/Soreson/VP8)
Ethernet	Chipset	Microchip LAN7500
	Speed	1 10/100/1000 Mbps
Connectivity	Wi-Fi	WCN3620 802.11 b/g/n 2.4GHz
	Bluetooth	WCN3620 Bluetooth 4.1
	GNSS	WGR7640
RTC		Yes
WatchDog Timer		Yes
Expansion	SD socket	1 x SD socket
	M.2	1 x M.2 2230 Key.E
	mini PCIe	1 x Full size mini PCIe slot (USB signal only)
	SIM	1 x mini-SIM slot
I/O	SATA	-
	SATA Power	-
	USB	2 x USB 2.0 Type A / 2 x USB 2.0 pin header / 1 x micro USB client
	Audio	1 x line-out, 1 x mic-in via pin header
	SPDIF	-
	Serial Port	1 x 4 wires RS-232/422/485 via D-SUB 9 1 x 4 wires console via pin header (Configurable for general purpose UART or M.2 UART signal)
	SPI	1
	CAN	-
	GPIO	8 x GPIO via D-SUB 9 / 8 x GPIO via pin header (3.3V TTL level)
	I2C	1
	System Bus	-
	Touch	-
	I/R	-
	LED	1 x Power LED, 1 x Wi-Fi&BT LED
	Button	1 x Power Button, 1 x Reset Button
Power	Power Supply Voltage	9-36V
	Power Type	DC-in
	Power Consumption	6 W
Environment	Operational Temperature	0 ~ 60° C
	Operating Humidity	5% ~ 95%
Mechanical	Dimensions (W x D)	102 x 146 mm
Operating System		Android / Yocto Linux / Debian
Certifications		CE/RED/FCC/IC/SRRC/TELEC

美生研佳科技 15323776600

Block Diagram

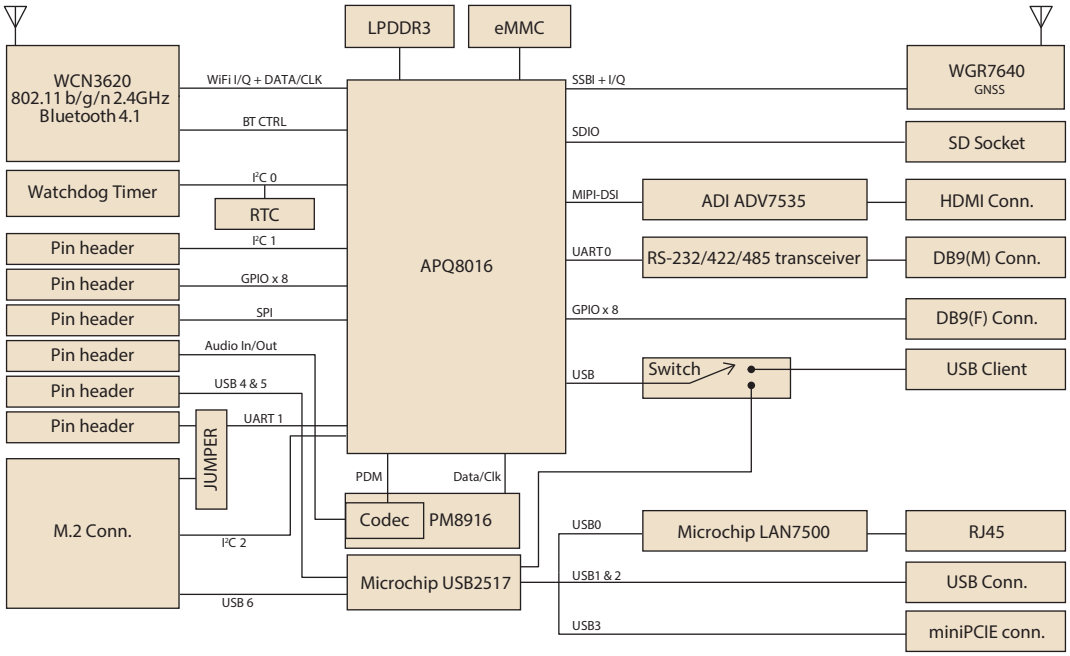

Ordering Information

Part Number	CPU	Memory	Flash	HDMI	LAN	Serial Port	USB Host	SD	Operating Temperature
RSB-4760CQ-QNA1E	Qualcomm APQ8016 Quad Core 1.2GHz	1GB	8GB	1	1	1 x 4 wires RS-232/422/485 1 x 4 wires UART (Console)	4	1	0 ~ 60 °C
RSB-4760CQ-WNA1E	Qualcomm APQ8016 Quad Core 1.2GHz	2GB	8GB	1	1	1 x 4 wires RS-232/422/485 1 x 4 wires UART (Console)	4	1	0 ~ 60 °C

Packing List

Part Number	Description
RSB-4760	RSB-4760 3.5" SBC

Optional Accessories

Port Number	Description
96PSA-A36W12R1	Adapter 100-240 36W 12V 3A 9NA0362308
170203183C	Power cord 3P Europe (WS-010+WS-083) 183 cm
170203180A	Power cord 3P UK 2.5A/3A 250 V 1.83 M
1700001524	Power cord 3P UL 10A 125 V 180 cm
1700008921	Power Cord 3P PSE 183cm
1700026931-01	Debug cable
ROM-ED20-00A1E	Debug adapter board
1750006043	Cable R/P SMA (M) to MHF 1.32 150mm
1750006010	Cable R/P SMA (M) to MHF 1.32 200mm
1750008671-01	Dipole Antenna. 2.4+5G WIFI 2.5/4dBi SMA/M-R L=109mm
1750007622-01	Dipole Antenna. 2.4 WIFI 3.5dBi SMA/M-R L=120mm
1750008717-01	Dipole Antenna. 2.4+5G WIFI 3dBi SMA/M-R L=109mm
1750008772-01	Dipole Antenna. 2.4+5G WIFI 3/4.4dBi SMA/M-R L=136mm
1750006432	Antenna GPS antenna 5000mm
1750007991-01	Antenna GPS+BDS+GONASS 5000mm
1750006264	Antenna Cable SMA(F)/MHF 15cm
1750006009	Antenna Cable SMA(F)/MHF 25cm

Dimensions

Unit: mm

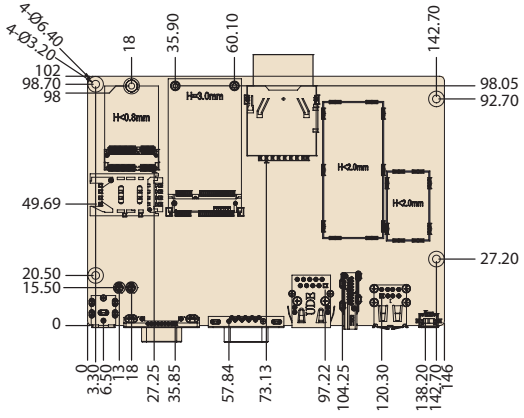

Exrernal I/O

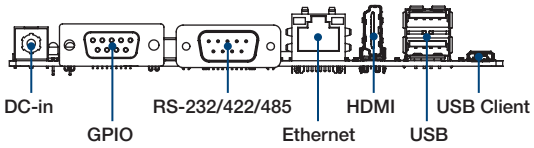

Embedded Linux Support and Design-in Services

Hardware Certified Ubuntu and Yocto with Eco Partner Services

Linux is the most popular embedded OS for transportation, outdoor services, factory automation, and mission critical applications. Its open source and kernel reliability features ease security updates, and make it particularly adaptable to new AI and Edge computing technology. Advantech has cooperated with Canonical and other software partners to provide hardware certified Ubuntu image and Yocto BSP as Linux offerings. The Advantech, Embedded Linux, and Android Alliance (ELAA) delivers local software services and consultation.

Features

Certified OS and BSP

- Platform compatibility tests
- Preloaded functional driver and software stacks

Licensed Services

- License authorized Canonical delivers 10-years of bug fixes and security updates
- In-house bundled service

Numerous AI and Edge Resources

- Containerized technology for service provision and deployment
- AI resources from Caffe, TensorFlow, and mxnet

Local Partner Alliance

- Embedded Linux and Android Alliance (ELAA)

WISE-DeviceOn

Massive IoT Device Management Utility

IoT deployment and management typically involves numerous disparate devices installed on multiple sites. These devices require effective monitoring, managing, and tracking. Advantech's easy-to-use WISE-DeviceOn interface enables users to remotely monitor device health, troubleshoot problems, and send software/firmware updates over-the-air (OTA). In sum, DeviceOn empowers quick real-time responsiveness to emerging problems.

Features

Comprehensive Management

- Devices status
- Peripherals/firmware
- Open for extension

Remote Access

- Real-time monitoring
- Remote controls
- Troubleshooting

Efficient Operations

- Zero-touch on-boarding
- OTA updates
- Batch control

Product Highlights

SOM-6883

High-performance 11th Gen Intel® COMe Type 6 Module

MIO-5375

Compact 11th Gen Intel® Outdoor Focused 3.5" SBC

EPC-B5587

10th Gen Intel® Xeon® based Edge server

EPC-R3220

Arm based IoT Edge Gateway