RSB-3410

NXP ARM® Cortex®-A9 i.MX6 2.5" SBC

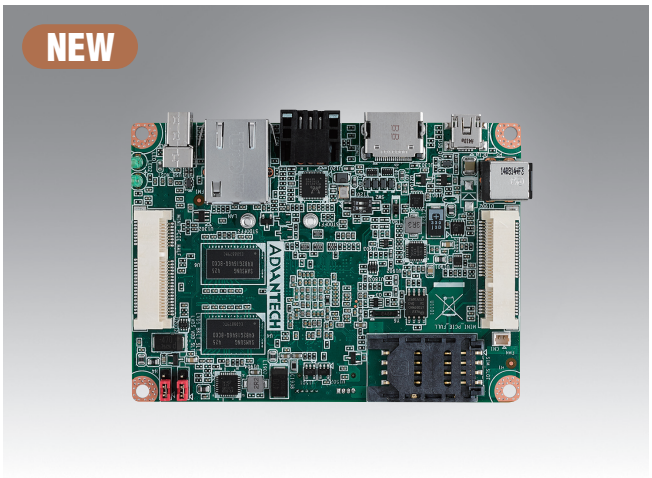

Features

- NXP ARM® Cortex®-A9 i.MX6 Dual Lite 1 GHz
- Onboard DDR3 1 GB, 800 MHz memory
- HDMI 1920x1080 at 60Hz, Single Channel 18/24 bit LVDS
- 1 4-wire UART, 1 USB 2.0, 1 USB OTG
- 2 mini-PCIe for WIFI/3G support
- Low power consumption, fanless design
- Supports Linux and Android

Specifications

Form Factor		2.5" SBC
Processor System	CPU	NXP i.MX6 Cortex-A9 Dual Lite 1 GHz
Memory	Technology	DDR3 800 MHz
	Capacity	On-board DDR3 1 GB
	Flash	4 GB eMMC Flash for O.S. and 4 MB NOR Flash for Advantech boot loader
Graphics	HDMI	1 HDMI, 1920 x 1080 at 60Hz
	LVDS	Single Channel 18/24 bit LVDS
	Graphics Engine	1 IPU. OpenGL ES 2.0 for 3D, BitBlt for 2D and OpenVG 1.1
	H/W Video Codec	Decoder: MPEG-4 ASP, H.264 HP, H.263, MPEG-2 MP, MJPEG BP Encoder: MPEG-4 SP, H.264 BP, H.263, MJPEG BP
Ethernet	Chipset	NXP i.MX6 integrated RGMII
	Speed	1 10/100/1000 Mbps
WatchDog Timer	WatchDog Timer	1~6553s, power on/off 4s
I/O	USB	1 USB 2.0 Host
	USB OTG	1 USB 2.0 OTG
	SDIO	1 SD Slot
	Serial Port	1 4-wire RS-232 (Tx, Rx, RTS, CTS)
Indicator	LED	1 Green LED for the system power 1 Green LED (for user define)
Expansion	Full Size Mini PCIe	1
	Half Size Mini PCIe	1
	SD Socket	1
	SIM Slot	1
Power	Power Supply Voltage	+12 V
	Power Type	DC-in
	Power Consumption	4.4W (Max)
Environment	Operating Temperature	0 ~ 60 °C
	Operating Humidity	5%~95% Relative Humidity, non-condensing
Mechanical	Dimensions	100 x 72 x 19 mm
	Weight	210g
Operation System		Linux & Android
Certifications		CE/FCC Class B

昊生 研伟科技 15323776600

Block Diagram

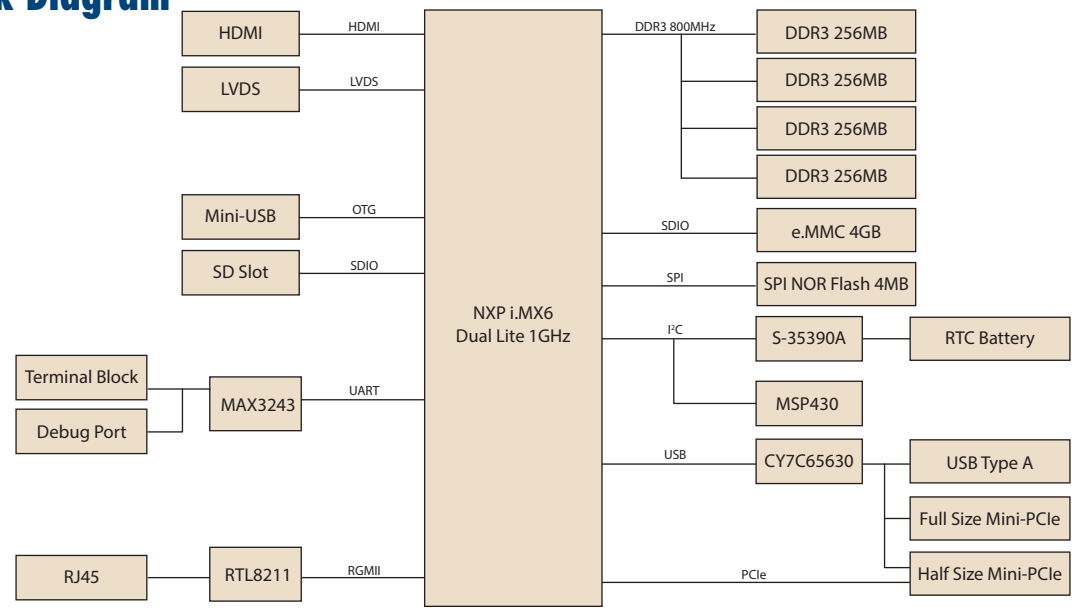

Ordering Information

Part No.	CPU	Memory	Flash Memory	HDMI	VGA	LVDS	LAN	Serial Port	SATA	USB Host	System bus	SD	CANbus	Operating Temperature
RSB-3410DL-MDA1E	NXP i.MX6 Dual Lite 1 GHz	1 GB	4 GB	1	-	1	1	1 x 4 wire RS-232	-	1 USB2.0 1 OTG	-	1	-	0 ~ 60 °C

Packing List

Part Number	Description
9696341000E	RSB-3410 2.5" SBC
1652006794-01	Terminal Block 6 Pin

Optional Accessories

Part Number	Description
96PSA-A36W12R1-3	ADAPTER 100-240V 36W 12V 3A
SQF-ISDM1-8G-21C	SQF SDHC C10 UHS-I MLC 8G, 1CH (-25~85°C)
EWM-W135F01E	802.11 a/b/g/n, Atheros AR9382, 2T2R
EWM-C117FL06E*	LTE 4G,3G WCDMA/DC-HSPA+, 2G module, MPCI-L280H
1750006043	Cable R/P SMA (M) to MHF 1.32 150mm (Wi-Fi Cable)
1750008717-01	Dipole Ant. D.B 2.4/5G WIFI 3dBi SMA/M-R BLK
1750006264	Antenna SMA(F)/MHF 15cm SMALFN8-3150A-00X00R
1750008303-01	Antenna AN0727-64SP6BSM
1700001524	Power Cord 3P UL 10A 125V 180cm
170203183C	Power Cord 3P Europe (WS-010+WS-083)183cm
170203180A	Power Cord 3P UK 2.5A/3A 250V 1.83M
1700008921	Power Cord 3P PSE 183cm
1700021565-01	Debug cable
1700018730	USB cable
1700022161-01	UART cable
1700019146	Power Cord CCC 3P 10A 250V 183cm

* Please contact us to get suitable cellular module for your region.

Dimensions

Unit: mm

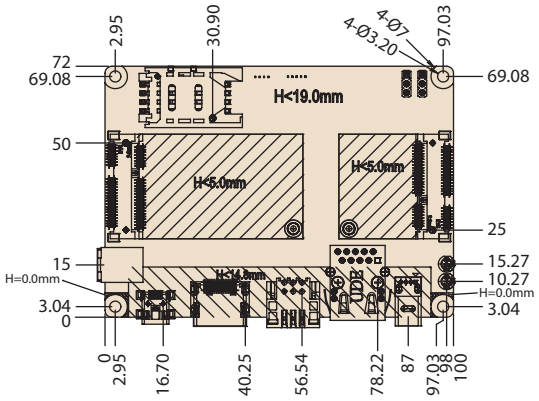

External I/O

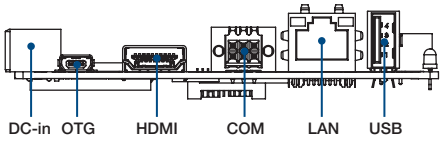

Embedded Linux Support and Design-in Services

Hardware Certified Ubuntu and Yocto with Eco Partner Services

Linux is the most popular embedded OS for transportation, outdoor services, factory automation, and mission critical applications. Its open source and kernel reliability features ease security updates, and make it particularly adaptable to new AI and Edge computing technology. Advantech has cooperated with Canonical and other software partners to provide hardware certified Ubuntu image and Yocto BSP as Linux offerings. The Advantech, Embedded Linux, and Android Alliance (ELAA) delivers local software services and consultation.

Features

Certified OS and BSP	Licensed Services	Numerous AI and Edge Resources	Local Partner Alliance
• Platform compatibility tests • Preloaded functional driver and software stacks	• License authorized Canonical delivers 10-years of bug fixes and security updates • In-house bundled service	• Containerized technology for service provision and deployment • AI resources from Caffe, TensorFlow, and mxnet	• Embedded Linux and Android Alliance (ELAA)

WISE-DeviceOn

Massive IoT Device Management Utility

IoT deployment and management typically involves numerous disparate devices installed on multiple sites. These devices require effective monitoring, managing, and tracking. Advantech's easy-to-use WISE-DeviceOn interface enables users to remotely monitor device health, troubleshoot problems, and send software/firmware updates over-the-air (OTA). In sum, DeviceOn empowers quick real-time responsiveness to emerging problems.

Features

Comprehensive Management	Remote Access	Efficient Operations
• Devices status • Peripherals/firmware • Open for extension	• Real-time monitoring • Remote controls • Troubleshooting	• Zero-touch on-boarding • OTA updates • Batch control

Product Highlights

SOM-6883
High-performance 11th Gen Intel® COMe Type 6 Module

MIO-5375
Compact 11th Gen Intel® Outdoor Focused 3.5" SBC

EPC-B5587
10th Gen Intel® Xeon® based Edge server

EPC-R3220
Arm based IoT Edge Gateway