RSB-3720

NXP i.MX8M Plus Cortex®-A53 2.5" SBC with UIO40-Express

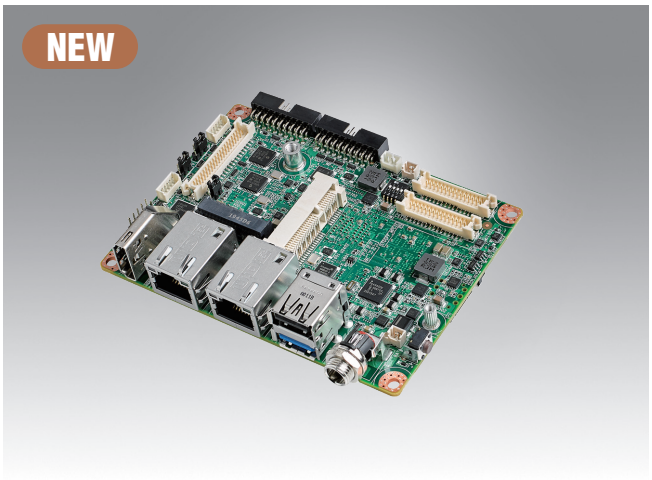

Features

- NXP Arm® Cortex®-A53 i.MX8M Plus Quad/Dual up to 1.8 GHz
- Onboard LPDDR4 4 GB/ 6 GB, 4000MT/s memory
- HDMI 1920x1080 at 60Hz, 1 Single or 1 Dual Channel 24 bit LVDS (or 1 4-Lane MIPI-DSI by BOM Option)
- 1 4-wire RS-232/422/485, 1 USB3.2 Gen1 By 1, 1 USB2.0, 1 Micro SD, 1 Mic. in / Line out
- 1 mini-PCIe for 3G/4G, 1 M.2 2230 Key E Slot
- Supports Ycoto Linux and Android
- Support I/O Expansions by UIO40-Express I/O boards, please refer to page #3 for more information

Specifications

Form Factor		2.5" SBC with UIO40-Express for I/O Expansions
Processor System	CPU	NXP i.MX8M Plus Cortex-A53 Quad/Dual core (up to 1.8GHz)
Memory	Technology	LPDDR4 4000MT/s
	Capacity	On-board 4 GB / 6 GB
	Flash	16 GB eMMC Flash for O.S. and 8 MB QSPI NOR Flash for board information
NPU	NPU	2.3 TOP/s Neural Network Performance (Support AI models based on Tensorflow Lite and armNN Framework)
Graphics	HDMI	1 HDMI 2.0a, up to 3840 x 2160 at 30Hz
	LVDS	1 Single Channel or 1 Dual Channel 24 Bit LVDS, Backlight power, 5/12V, Max. 1A
	MIPI-DSI	1 4-Lane MIPI-DSI (shared with LVDS connector) by BOM option
	Graphics Engine	GC7000UL with 2D/3D Graphic Acceleration supporting 1G Pixel/s, OpenVG 1.1, Open GL ES3.1, Vulkan, and Open CL 1.2 FP.
	H/W Video Codec	Decoder: 1080p60 HEVC/H.265 Main, VP9 Profile 0/2, VP8, AVC/H.264 Baseline/Main/High Encoder: 1080p60 AVC/H.264, HEVC/H.265
Ethernet	Chipset	NXP i.MX8M Plus integrated RGMII
	Speed	2 10/100/1000 Mbps
WatchDog Timer	WatchDog Timer	1~6553s, power on/off 4s
I/O	USB	1 USB3.2 Gen1 By 1 Host, 1 USB2.0 Host
	Audio	1 Mic. in / Line out by pin header
	CAN	1 CANbus for RSB-3720CQ/CD or 1 CAN-FD for RSB-3720WQ/WD by COM1 pin header*
	Serial Port	1 4 wires RS-232/422/485 by COM1 pin header* (default configured as debug console)
	Camera Input	2 4-Lane MIPI-CSI2
	UIO40-Express	1 USB3.2 Gen1 By 1, 3 USB2.0, 10 GPIO, 2 UART (one shared with debug console), 1 CANbus, 1 I2C
Indicator	LED	1 Power LED 1 Programmable LED
Expansion	Mini PCIe	1 Full Size Mini PCIe Slot (USB Signal Only)
	M.2	1 M.2 2230 Key E Slot (USB/PCIe/SDIO/UART/I2S)
	SD Socket	1 Micro SD Socket
	SIM Slot	1 Nano SIM Slot
Power	Power Supply Voltage	+12 V
	Power Type	Lockable DC-Jack (2pin type connector by BOM option)
	Power Consumption	7.13W
Environment	Operating Temperature	0 ~ 60 °C / -40 ~ 85 °C
	Operating Humidity	5%~95% Relative humidity, non-condensing
Mechanical	Dimensions	100 x 72 x 19 mm
	Weight	0.05kg
Operation System		Yocto Linux & Android
Certifications		CE/FCC Class B

*COM1 pin header shared by serial port and CANbus

Block Diagram

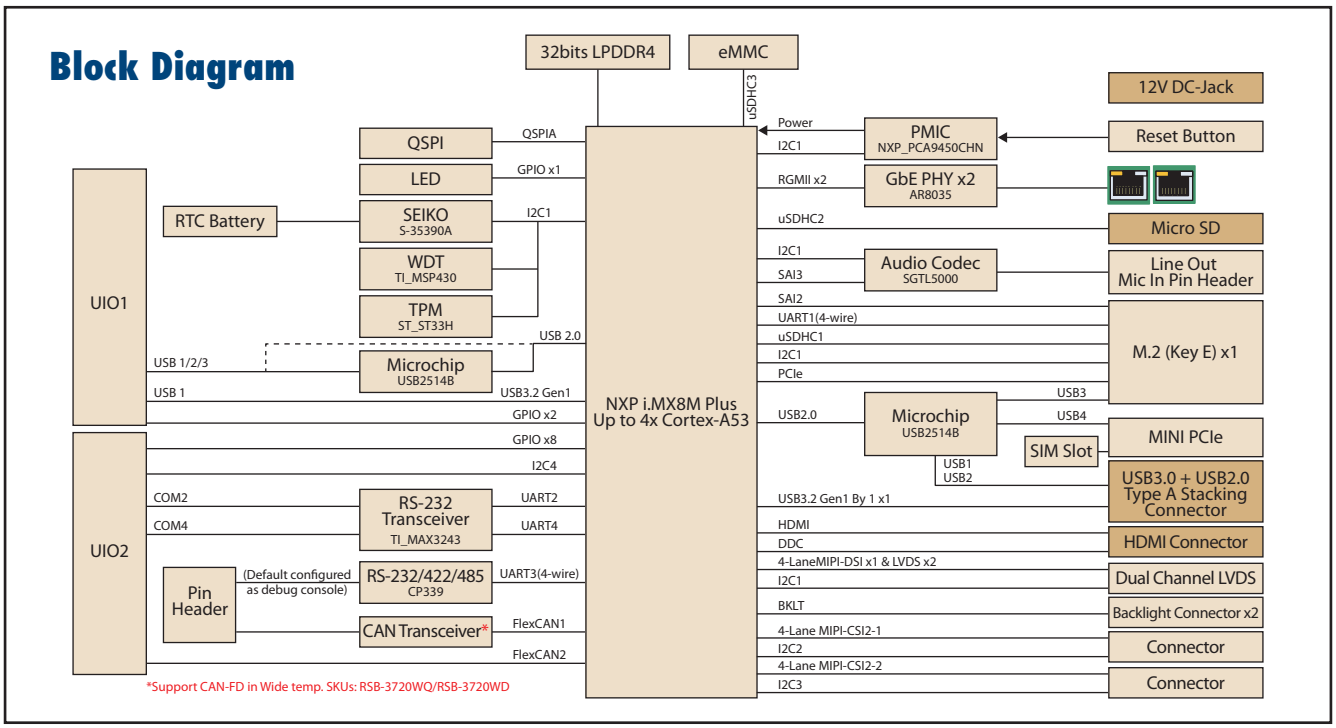

Ordering Information

Part No.	CPU	Memory	Flash Memory	HDMI	LVDS	LAN	USB Host	SD	CANbus	Operating Temperature
RSB-3720CD-BCA1E	NXP i.MX8M Plus Dual 1.8 GHz	4 GB	16 GB	1	2	2	2	1	2	0 ~ 60 °C
RSB-3720WD-BCA1E	NXP i.MX8M Plus Dual 1.6 GHz	4 GB	16 GB	1	2	2	2	1	2 (1 with CAN-FD)	-40 ~ 85 °C
RSB-3720CQ-ACA1E	NXP i.MX8M Plus Quad 1.8 GHz	6 GB	16 GB	1	2	2	2	1	2	0 ~ 60 °C
RSB-3720WQ-ACA1E	NXP i.MX8M Plus Quad 1.6 GHz	6 GB	16 GB	1	2	2	2	1	2 (1 with CAN-FD)	-40 ~ 85 °C

Packing List

Part Number	Description
RSB-3720	RSB-3720 2.5" SBC with Heat Sink

Optional Accessories

Part Number	Description
96PSA-A36W12W7-5	ADP A/D 100-240V 36W 12V C6 LOCK DC JACK 62368
1700001524	Power Cord 3P UL 10A 125V 180cm
170203183C	Power Cord 3P Europe (WS-010+WS-083) 183cm
170203180A	Power Cord 3P UK 2.5A/3A 250V 1.83M
1700008921	Power Cord 3P PSE 183cm
1700009652	Power Cord CCC 3P 10A 250V 187cm
TBD	UIO20 extending cable of RSB-3720 for 3USB&2GPIO
1700030307-01	UIO40 extending cable of RSB-3430, 3COM&8GPIO
1700031429-01	Line out cable
1700026878-01	Mic. in cable
1700100250	Debug Cable 10P-2.0/D-SUB 9P(M) 25CM
1700019474	RS-232 Cable DB9 female to DB9 female
96LEDK-A070WV40NB1	LVDS 7" Panel G070VW01 V0 (VDD: 3.3V, Backlight Power: 12V)
1700021883-01	LVDS Cable
1700032155-01	LVDS BKLT Cable
EWM-W163M201E	802.11 a/b/g/n/ac,QCA6174A,2T2R,w/BT4.1,M.2 2230
1750008717-01	Dipole Ant. D.B 2.4/5G WIFI 3dBi SMA/M-R BLK
1750007965-01	Antenna Cable R/P SMA (M) to MHF4, 300mm
EWM-C117FL06E*	LTE 4G,3G WCDMA/DC-HSPA+, 2G module, MPCI-L280H
1750008303-01	Antenna AN0727-64SP6BSM
1750006009	Antenna Cable SMA (F) to MHF 1.32 25cm

* Please contact us to get suitable celluar module for your region.

Dimensions

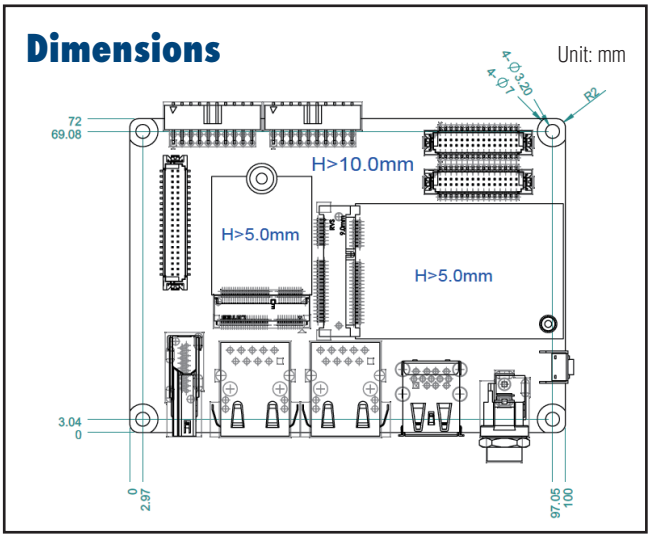

Front I/O on RSB-3720

Compatible I/O Expansion Boards

UIO-4030

1 x RS-485
1 x RS-232
1 x 4 DIs & 4 DOs

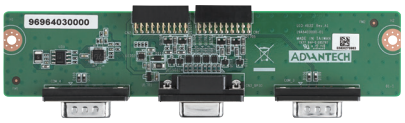

Specifications

General	
USB	–
RS-232	1 x 2 wires RS-232
RS-485	1 x RS-485
GPIO	4 DIs, 4 DOs (2.5~24V)
CAN Bus	–
GbE	–
Dimension	146 x 31 x 22 mm
Environment	
Weight	180g
Operating Humidity	5 ~ 95% relative humidity, non-condensing
Operating Temperature	-40 ~ 85 °C
Storage Temperature	-40 ~ 85 °C and 60 °C @ 95% RH Non-Condensing

Ordering Information

P/N	Description
UIO-4030	UIO-4030, 1 RS232, 4 DIs, 4 DOs, 1 RS-485

UIO-4032

1 x GbE
2 x USB2.0
2 x RS-232

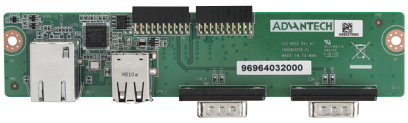

Specifications

General	
USB	2 x USB 2.0
RS-232	2 x 2 wires RS-232
RS-485	–
GPIO	–
CAN Bus	–
GbE	1 x GbE
Dimension	146 x 31 x 22 mm
Environment	
Weight	200g
Operating Humidity	5 ~ 95% relative humidity, non-condensing
Operating Temperature	-40 ~ 85 °C
Storage Temperature	-40 ~ 85 °C and 60 °C @ 95% RH Non-Condensing

Ordering Information

P/N	Description
UIO-4032	UIO-4032, 1 GbE, 2 USB, 2 RS-232

UIO-4034

1 x CAN bus
2 x RS-232

Specifications

General	
USB	–
RS-232	2 x 2 wires RS-232
RS-485	–
GPIO	–
CAN Bus	1 x CAN bus 2.0B, 1 Mbps
GbE	–
Dimension	146 x 31 x 22 mm
Environment	
Weight	180g
Operating Humidity	5 ~ 95% relative humidity, non-condensing
Operating Temperature	-40 ~ 85 °C
Storage Temperature	-40 ~ 85 °C and 60 °C @ 95% RH Non-Condensing

Ordering Information

P/N	Description
UIO-4034	UIO-4034, 1 CAN, 2 RS-232

Compatible Main Boards

Part No.	Description
RSB-3430XD-PXA1E*	RSB-3430 NXP i.MX6 Series 2.5" UIO Main Board
RSB-3720XX-XCA1E*	RSB-3720 NXP i.MX8M Plus Series 2.5" UIO Main Board
RSB-3710XX-XXA1E*	RSB-3710 Rockchip RK3399 Series 2.5" UIO Main Board

*X indicates different configurations, please refer to each main board's datasheet for complete P/N to order.

UIO-4036

4 x GbE

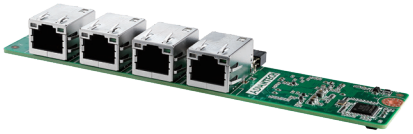

Specifications

General	
USB	–
RS-232	–
RS-485	–
GPIO	–
CAN Bus	–
GbE	4 x GbE
Dimension	146 x 31 x 20 mm
Environment	
Weight	200g
Operating Humidity	5 ~ 95% relative humidity, non-condensing
Operating Temperature	-40 ~ 85 °C
Storage Temperature	-40 ~ 85 °C and 60 °C @ 95% RH Non-Condensing

Ordering Information

P/N	Description
UIO-4036	UIO-4036, 4 GbE

Compatible Main Boards

Part No.	Description
RSB-3430XD-PXA1E*	RSB-3430 NXP i.MX6 Series 2.5" UIO Main Board
RSB-3720XX-XCA1E*	RSB-3720 NXP i.MX8M Plus Series 2.5" UIO Main Board
RSB-3710XX-XXA1E*	RSB-3710 Rockchip RK3399 Series 2.5" UIO Main Board

*X indicates different configurations, please refer to each main board's datasheet for complete P/N to order.

Embedded Linux Support and Design-in Services

Hardware Certified Ubuntu and Yocto with Eco Partner Services

Linux is the most popular embedded OS for transportation, outdoor services, factory automation, and mission critical applications. Its open source and kernel reliability features ease security updates, and make it particularly adaptable to new AI and Edge computing technology. Advantech has cooperated with Canonical and other software partners to provide hardware certified Ubuntu image and Yocto BSP as Linux offerings. The Advantech, Embedded Linux, and Android Alliance (ELAA) delivers local software services and consultation.

Features

Certified OS and BSP	Licensed Services	Numerous AI and Edge Resources	Local Partner Alliance
• Platform compatibility tests • Preloaded functional driver and software stacks	• License authorized Canonical delivers 10-years of bug fixes and security updates • In-house bundled service	• Containerized technology for service provision and deployment • AI resources from Caffe, TensorFlow, and mxnet	• Embedded Linux and Android Alliance (ELAA)

WISE-DeviceOn

Massive IoT Device Management Utility

IoT deployment and management typically involves numerous disparate devices installed on multiple sites. These devices require effective monitoring, managing, and tracking. Advantech's easy-to-use WISE-DeviceOn interface enables users to remotely monitor device health, troubleshoot problems, and send software/firmware updates over-the-air (OTA). In sum, DeviceOn empowers quick real-time responsiveness to emerging problems.

Features

Comprehensive Management	Remote Access	Efficient Operations
• Devices status • Peripherals/firmware • Open for extension	• Real-time monitoring • Remote controls • Troubleshooting	• Zero-touch on-boarding • OTA updates • Batch control

Product Highlights

SOM-6883
High-performance 11th Gen Intel® COMe Type 6 Module

MIO-5375
Compact 11th Gen Intel® Outdoor Focused 3.5" SBC

EPC-B5587
10th Gen Intel® Xeon® based Edge server

EPC-R3220
Arm based IoT Edge Gateway